ECN	DATE	APPD	DESCRIPTION	REV
	04/14 1997		Revised per marking spec requirements.	02
A-1646	6/7 2000	CK	add angle for the chamfer of the tube	03
A-1732	9/29 2000	CK	1. Revise note 5 & 6 2. Add tube marking description.	04

1. Material: Clear, transparent PVC.
2. This tube is to be tested per package material standards specs MIL-PRF-38535 and EIA-STD-5.
3. Finish: To be treated with anti-static coating: static charge on tube to be 50 Volts at a distance of 2.0 inches from a sensing probe.
4. No chips or cracks allowed.
5. .010" maximum burr on inner tube edge.
6. The flatness of tube saddle should be 0.005" Max.
7. No oil, grease, or other foreign contamination to be on or in tube.
8. Surface Resistivity = 10^9 - 10^{11} ohm/sq.
9. Refer to MA-5016 for marking instructions.

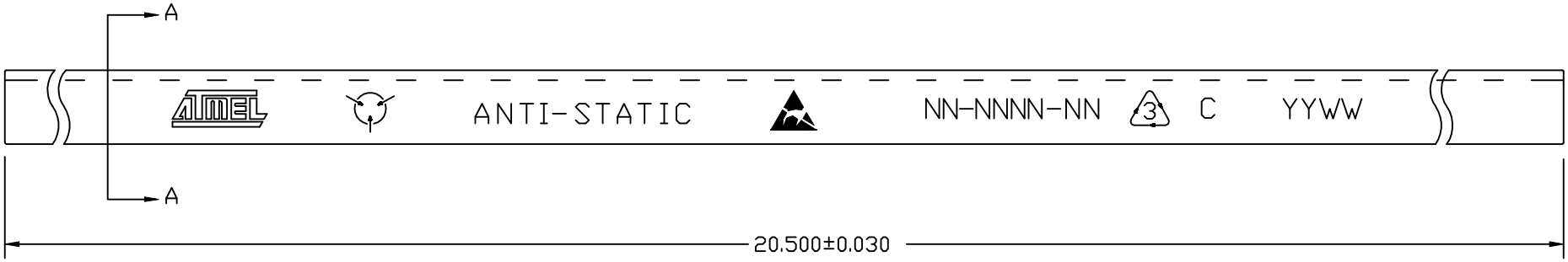

TOP SIDE

WHERE,

10-0516-00 = Atmel Part Number

YYWW = Date code of tube manufacture (optional)

C = Assembly location code (Refer to spec MA-5019)

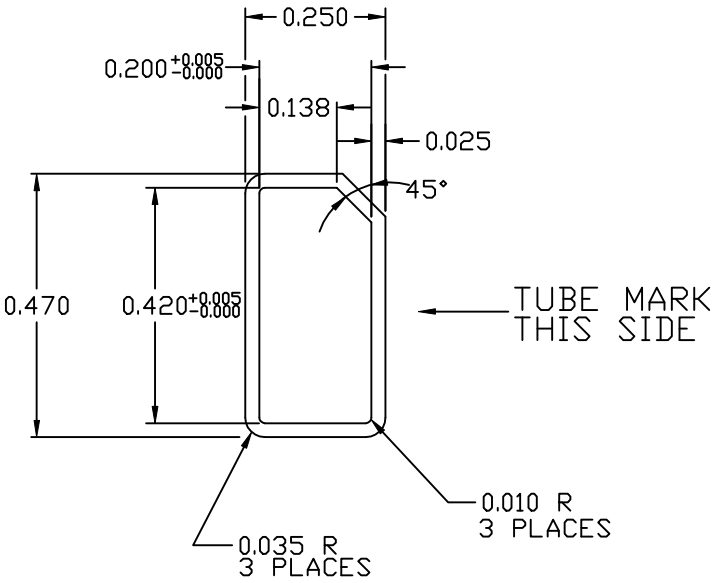

SECTION "A-A"

UNLESS OTHERWISE SPECIFIED:
DIMENSIONS ARE IN INCHES
TOLERANCES ARE:
.XX ±
.XXX ± 0.010"

DRAWN	DATE
Rodel Gomez	9/29/00
CHECKED	DATE
Charlie Kung	9/29/00
APPROVED	DATE
Charlie Kung	9/29/00

ATMEL CORPORATION
2325 Orchard Parkway
SAN JOSE, CA 95131

SHIPPING TUBE
20 LD PLCC

SIZE	SCALE	DRAWING NUMBER
A	1X	10-0516-00