DRAM

64 K x 16 DRAM

FAST PAGE MODE

FEATURES

- X16 organization
- FAST PAGE access mode
- 2 $\overline{CAS}$ Byte/Word Read/Write operation
- Single 5V (± 10%) power supply
- TTL-compatible inputs and outputs
- 256-cycle refresh in 4ms
- Refresh modes : $\overline{RAS}$ only, $\overline{CAS}$ BEFORE $\overline{RAS}$ (CBR) and HIDDEN
- JEDEC standard pinout
- Key AC Parameter

	t_{RAC}	t_{CAC}	t_{RC}	t_{PC}
-25	25	8	43	15
-30	30	9	55	20
-35	35	10	65	23
-40	40	11	75	25

ORDERING INFORMATION - PACKAGE

40-pin 400mil SOJ

44 / 40-pin 400mil TSOP (TypeII)

PRODUCT NO.	PACKING TYPE
M10B11664A-25J	SOJ
M10B11664A-30J	
M10B11664A-35J	
M10B11664A-40J	
M10B11664A-25T	TSOPII
M10B11664A-30T	
M10B11664A-35T	
M10B11664A-40T	

GENERAL DESCRIPTION

The M10B11664A is a randomly accessed solid state memory, organized as 65,536 x 16 bits device. It offers Fast Page mode , 5V(± 10%) single power supply. Access time (-25,-30,-35,-40) and package type (SOJ, TSOP II) are optional features of this family. All these family have $\overline{CAS}$ - before -$\overline{RAS}$, $\overline{RAS}$ -only refresh and Hidden refresh capabilities.

Two access modes are supported by this device : Byte access and Word access. Use only one of the two $\overline{CAS}$ and leave the other staying high will result in a BYTE access. WORD access happens when two $\overline{CAS}$ ($\overline{CASL}$, $\overline{CASH}$) are used. $\overline{CASL}$ transiting low during READ or WRITE cycle will output or input data into the lower byte (IO0~IO7), and $\overline{CASH}$ transiting low will output or input data into the upper byte (IO8~15).

PIN ASSIGNMENT

SOJ Top View

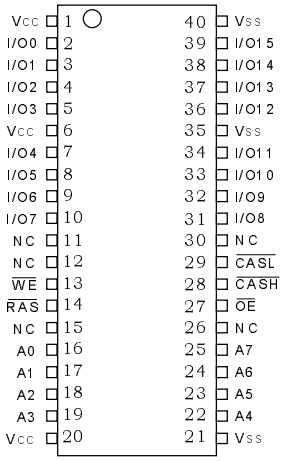

TSOP (TypeII) Top View

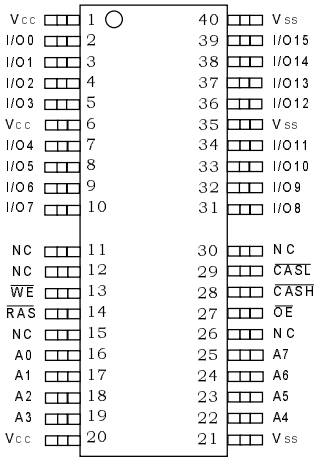

FUNCTIONAL BLOCK DIAGRAM

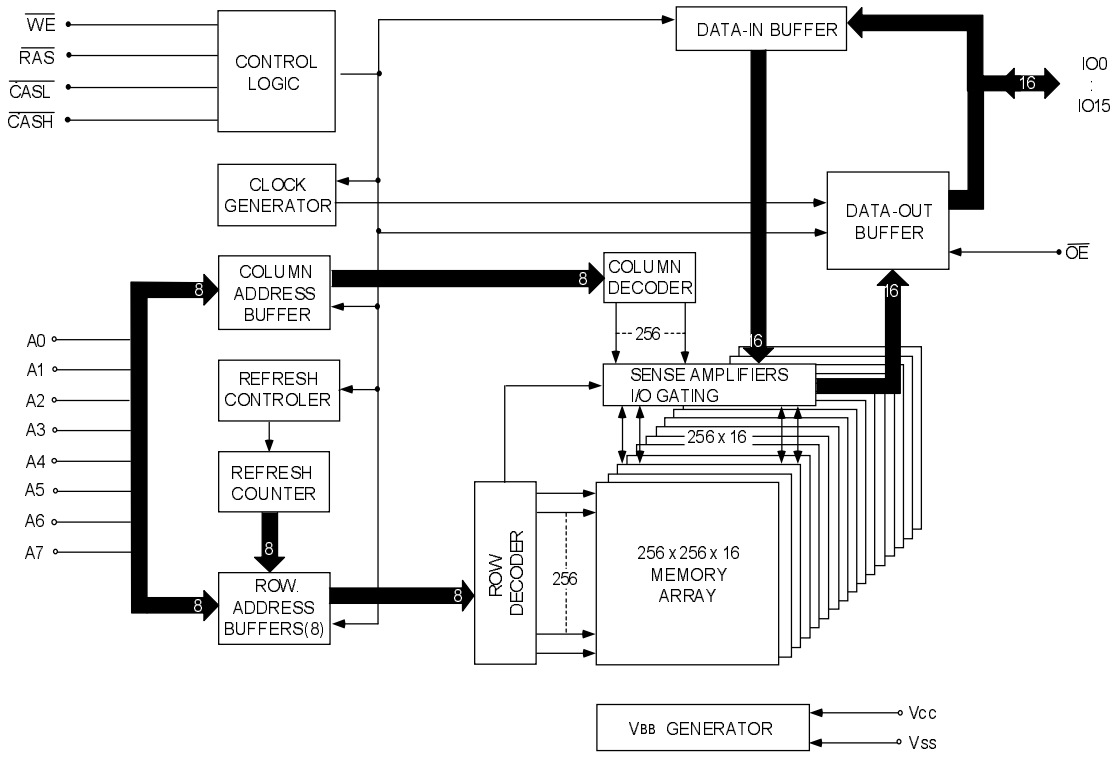

PIN DESCRIPTIONS

PIN NO.	PIN NAME	TYPE	DESCRIPTION
16~19,22~25	A0~A7	Input	Address Input Row Address : A0~A7 Column Address : A0~A7
14	$\overline{RAS}$	Input	Row Address Strobe
28	$\overline{CASH}$	Input	Column Address Strobe / Upper Byte Control
29	$\overline{CASL}$	Input	Column Address Strobe / Lower Byte Control
13	$\overline{WE}$	Input	Write Enable
27	$\overline{OE}$	Input	Output Enable
2~5,7~10,31~34,36~39	I/O0 ~ I/O15	Input / Output	Data Input / Output
1,6,20	Vcc	Supply	Power, 5V
21,35,40	Vss	Ground	Ground
11,12,15,30	NC	-	No Connect

ABSOLUTE MAXIMUM RATINGS

Voltage on Any pin Relative to Vss ... .-1V to +7V

Operating Temperature, T_A (ambient) ....0 °C to +70 °C

Storage Temperature (plastic) .....-55 °C to +150 °C

Power Dissipation 1.0W

Short Circuit Output Current 50mA

Permanent device damage may occur if "Absolute Maximum Ratings" are exceeded. This is a stress rating only, and functional operation of the device above those conditions indicated in the operational sections of this specification is not implied. Exposure to absolute maximum rating conditions for extended periods may affect reliability.

DC ELECTRICAL CHARACTERISTICS AND RECOMMENDED OPERATING CONDITIONS (0 °C ≤ T_A ≤ 70 °C ; V_{CC} = 5V ± 10% unless otherwise noted)

DESCRIPTION	CONDITIONS	SYMBOL	MIN	MAX	UNITS	NOTES
Supply Voltage		V_{CC}	4.5	5.5	V	1
Supply Voltage		V_{SS}	0	0	V	
Input High (Logic)Voltage		V_{IH}	2.4	V_{CC} +1	V	1
Input Low (Logic)Voltage		V_{IL}	-1.0	0.8	V	1
Input Leakage Current	0V ≤ V_{IH} ≤ 7V	I_{LI}	-10	10	μ A	
Output Leakage Current	0V ≤ V_{OUT} ≤ 7V Output(s) disable	I_{LO}	-10	10	μ A	
Output High Voltage	I_{OH} = -5 mA	V_{OH}	2.4	-	V	
Output Low Voltage	I_{OL} = 4.2 mA	V_{OL}	-	0.4	V	

Note : 1.All Voltages referenced to V_{SS}

DESCRIPTION	CONDITIONS	SYMBOL	MAX				UNITS	NOTES
			-25	-30	-35	-40		
Operating Current	$\overline{RAS}$, $\overline{CAS}$ cycling , t_{RC} =min	I_{CC1}	170	150	130	120	mA	1,2
Standby Current	TTL interface, $\overline{RAS}$, $\overline{CAS}$ = V_{IH} , D_{OUT} =High-Z	I_{CC2}	4	4	4	4	mA	
	CMOS interface, $\overline{RAS}$, $\overline{CAS}$ >V_{CC}-0.2V		2	2	2	2	mA	
$\overline{RAS}$ only refresh Current	t_{RC} = min	I_{CC3}	170	150	130	120	mA	2
FAST Page Mode Current	t_{PC} = min	I_{CC4}	170	150	130	120	mA	1,3
Standby Current	$\overline{RAS}$ =V_{IH} , $\overline{CAS}$ = V_{IL}	I_{CC5}	5	5	5	5	mA	1
$\overline{CAS}$ Before $\overline{RAS}$ Refresh Current	t_{RC} = min	I_{CC6}	170	150	130	120	mA	

Note : 1. ICC max is specified at the output open condition.

2. Address can be changed twice or less while $\overline{RAS}$ =V_{IL} .

3. Address can be changed once or less while $\overline{CAS}$ =V_{IH} .

CAPACITANCE

(Ta = 25 °C , V_{CC} = 5V ± 10%)

PARAMETER	SYMBOL	TYP	MAX	UNIT
Input Capacitance (address)	C_{I1}	-	5	pF
Input Capacitance ($\overline{RAS}$, $\overline{CASH}$, $\overline{CASL}$, $\overline{WE}$, $\overline{OE}$)	C_{I2}	-	7	pF
Output capacitance (I/O0~I/O15)	$C_{I/O}$	-	10	pF

AC ELECTRICAL CHARACTERISTICS (Ta = 0 to 70 °C , V_{CC} =5V ± 10%, V_{SS} = 0V) (note 14)

Test Conditions
- Input timing reference levels : 0V, 3V
- Output reference level : V_{OL}= 0.8V, V_{OH}=2.0V
- Output Load : 2TTL gate + CL (50pF)
- Assumed t_T = 2ns

PARAMETER	SYMBOL	-25		-30		-35		-40		UNIT	Notes
		MIN	MAX	MIN	MAX	MIN	MAX	MIN	MAX		
Read or Write Cycle Time	t_{RC}	43		55		65		75		ns	
Read Write Cycle Time	t_{RWC}	65		85		95		105		ns	
Fast-Page-Mode Read or Write Cycle Time	t_{PC}	15		20		23		25		ns	22
Fast-Page-Mode Read-Write Cycle Time	t_{PCM}	37		42		49		52		ns	22
Access Time From $\overline{RAS}$	t_{RAC}		25		30		35		40	ns	4
Access Time From $\overline{CAS}$	t_{CAC}		8		9		10		11	ns	5,20
Access Time From $\overline{OE}$	t_{OAC}		8		9		10		11	ns	13,20
Access Time From Column Address	t_{AA}		12		16		18		20	ns	
Access Time From $\overline{CAS}$ Precharge	t_{ACP}		14		18		20		22	ns	20
$\overline{RAS}$ Pulse Width	t_{RAS}	25	10,000	30	10,000	35	10,000	40	10,000	ns	
$\overline{RAS}$ Pulse Width (Fast Page Mode)	t_{RASC}	25	10,000	30	100,000	35	100,000	40	100,000	ns	
$\overline{RAS}$ Hold Time	t_{RSH}	8		9		10		11		ns	24
$\overline{RAS}$ Precharge Time	t_{RP}	15		20		23		25		ns	
$\overline{CAS}$ Pulse Width	t_{CAS}	4	10,000	9	10,000	10	10,000	11	10,000	ns	
$\overline{CAS}$ Hold Time	t_{CSH}	21		30		35		40		ns	19
$\overline{CAS}$ Precharge Time	t_{CP}	4		5		6		7		ns	23
$\overline{RAS}$ to $\overline{CAS}$ Delay Time	t_{RCD}	10	17	10	21	10	25	10	29	ns	7,18
$\overline{CAS}$ to $\overline{RAS}$ Precharge Time	t_{CRP}	5		5		5		5		ns	19
Row Address Setup Time	t_{ASR}	0		0		0		0		ns	
Row Address Hold Time	t_{RAH}	5		5		5		5		ns	
$\overline{RAS}$ to Column Address Delay Time	t_{RAD}	8	13	8	14	8	17	8	20	ns	8
Column Address Setup Time	t_{ASC}	0		0		0		0		ns	18
Column Address Hold Time	t_{CAH}	5		5		5		5		ns	18
Column Address Hold Time (Reference to $\overline{RAS}$)	t_{AR}	22		26		30		34		ns	
Column Address to $\overline{RAS}$ Lead Time	t_{RAL}	12		16		18		20		ns	

(Continued)

PARAMETER	SYMBOL	-25		-30		-35		-40		UNIT	Notes
		MIN	MAX	MIN	MAX	MIN	MAX	MIN	MAX		
Read Command Setup Time	t_{RCS}	0		0		0		0		ns	15,18
Read Command Hold Time Reference to $\overline{CAS}$	t_{RCH}	0		0		0		0		ns	9,15,19
Read Command Hold Time Reference to $\overline{RAS}$	t_{RRH}	0		0		0		0		ns	9
$\overline{RAS}$ to Output in Low-Z	t_{CLZ}	3		3		3		3		ns	20
Output Buffer Turn-off Delay From $\overline{RAS}$	t_{OFF1}	3	15	3	15	3	15	3	15	ns	10,17,20
Output Buffer Turn-off to $\overline{OE}$	t_{OFF2}		6		8		8		8	ns	17,25
Write Command Setup Time	t_{WCS}	0		0		0		0		ns	11,15,18
Write Command Hold Time	t_{WCH}	5		5		5		5		ns	15,24
Write Command Hold Time(Reference to $\overline{RAS}$)	t_{WCR}	22		26		30		34		ns	15
Write Command Pulse Width	t_{WP}	5		5		5		5		ns	15
Write Command to $\overline{RAS}$ Lead Time	t_{RWL}	7		8		9		10		ns	15
Write Command to $\overline{CAS}$ Lead Time	t_{CWL}	5		6		7		8		ns	15,19
Data-in Setup Time	t_{DS}	0		0		0		0		ns	12,20
Data-in Hold Time	t_{DH}	5		5		5		5		ns	12,20
Data-in Hold Time (Reference to $\overline{RAS}$)	t_{DHR}	22		26		30		34		ns	
$\overline{RAS}$ to $\overline{WE}$ Delay Time	t_{RWD}	34		46		51		56		ns	11
Column Address to $\overline{WE}$ Delay Time	t_{AWD}	21		32		34		36		ns	11
$\overline{CAS}$ to $\overline{WE}$ Delay Time	t_{CWD}	17		25		26		27		ns	11,18
Transition Time (rise or fall)	t_T	1.5	50	1.5	50	2.5	50	2.5	50	ns	2,3
Refresh Period (256 cycles)	t_{REF}		4		4		4		4	ms	
$\overline{RAS}$ to $\overline{CAS}$ Precharge Time	t_{RPC}	10		10		10		10		ns	
$\overline{CAS}$ Setup Time(CBR REFRESH)	t_{CSR}	5		10		10		10		ns	1,18
$\overline{CAS}$ Hold Time(CBR REFRESH)	t_{CHR}	7		10		10		10		ns	1,19
$\overline{OE}$ Hold Time From $\overline{WE}$ During Read-Modify-Write Cycle	t_{OEH}	4		4		4		5		ns	16
$\overline{OE}$ Setup Prior to $\overline{RAS}$ During Hidden Refresh Cycle	t_{ORD}	0		0		0		0		ns	
Last $\overline{CAS}$ Going Low to First $\overline{CAS}$ Returning High	t_{CLCH}	4		9		10		11		ns	21
Read Setup Time Reference to $\overline{RAS}$ in CBR	t_{RSR}	5		5		5		5		ns	
Read Hold Time Reference to $\overline{RAS}$ in CBR	t_{RHR}	5		5		5		5		ns	

Notes :

1. Enables on-chip refresh and address counters.
2. V_{IH}(min) and V_{IL}(max) are reference levels for measuring timing of input signals. Transition times are measured between V_{IH} and V_{IL}.
3. In addition to meet the transition rate specification, all input signals must transit between V_{IH} and V_{IL} in a monotonic manner.
4. Assume that $t_{RCD} < t_{RCD}$(max). If t_{RCD} is greater than the maximum recommended value shown in this table, t_{RAC} will increase by the amount that t_{RCD} exceeds the value shown.
5. Assume that $t_{RCD} \geq t_{RCD(max)}$
6. If $\overline{RAS}$ is low at the falling edge of $\overline{RAS}$, data-out will be maintained from the previous cycle. To initiate a new cycle and clear the data-out buffer, $\overline{CAS}$ must be pulsed high.
7. Operation within the t_{RCD} limit ensures that t_{RCD}(max) can be met, t_{RCD}(max) is specified as a reference point only ; if t_{RCD} is greater than the specified t_{RCD}(max) limit, access time is controlled by t_{CAC}.
8. Operation within the t_{RAD} limit ensures that t_{RAD}(max) can be met. t_{RAD}(max) is specified as a reference point only ; if t_{RAD} is greater than the specified t_{RAD}(max) limit, access time is controlled by t_{AA}.
9. Either t_{RCH} or t_{RRH} must be satisfied for a READ cycle.
10. t_{OFF1}(max) defines the time at which the output achieves the open circuit condition ; it is not a reference to V_{OH} or V_{OL}.
11. t_{WCS}, t_{RWD}, t_{AWD} and t_{CWD} are restrictive operating parameters in LATE WRITE and READ-MODIFY-WRITE cycle only. If $t_{WCS} \geq t_{WCS(min)}$, the cycle is an EARLY WRITE cycle and the data output will remain an open circuit throughout the entire cycle. If $t_{RWD} \geq t_{RWD(min)}$, $t_{AWD} \geq t_{AWD(min)}$ and $t_{CWD} \geq t_{CWD(min)}$, the cycle is READ-WRITE and the data output will contain data read from the selected cell. If neither of the above conditions is met, the state of I/O (at access time and until $\overline{CAS}$ and $\overline{RAS}$ or $\overline{OE}$ go back to V_{IH}) is indeterminate. $\overline{OE}$ held high and $\overline{WE}$ taken low after $\overline{CAS}$ goes low result in a LATE WRITE ($\overline{OE}$ -controlled) cycle.
12. Those parameters are referenced to $\overline{CAS}$ leading edge in EARLY WRITE cycles and $\overline{WE}$ leading edge in LATE WRITE or READ-MODIFY- WRITE cycles.
13. During a READ cycle, if $\overline{OE}$ is low then taken HIGH before $\overline{CAS}$ goes high, I/O goes open, if $\overline{OE}$ is tied permanently low, a LATE WRITE or READ-MODIFY-WRITE operation is not possible.
14. An initial pause of 200 μs is required after power-up followed by eight $\overline{RAS}$ refresh cycles ($\overline{RAS}$ only or CBR) before proper device operation is assured. The eight $\overline{RAS}$ cycle wake-ups should be repeated any time the t_{REF} refresh requirement is exceeded.
15. WRITE command is defined as $\overline{WE}$ going low.
16. LATE WRITE and READ-MODIFY-WRITE cycles must have both t_{OFF2} and t_{OEH} met ($\overline{OE}$ high during WRITE cycle) in order to ensure that the output buffers will be open during the WRITE cycles.
17. The I/Os open during READ cycles once tOFF1 or t_{OFF2} occur.
18. Referenced to the earlier $\overline{CAS}$ falling edge.
19. Referenced to the latter $\overline{CAS}$ rising edge.
20. Output parameter (I/O) is referenced to corresponding $\overline{CAS}$ input, IO0~7 by $\overline{CASL}$ and IO8~15 by $\overline{CASH}$.
21. Last falling $\overline{CAS}$ edge to first rising $\overline{CAS}$ edge.
22. Last rising $\overline{CAS}$ edge to next cycle's last rising $\overline{CAS}$ edge.
23. Last rising $\overline{CAS}$ edge to first falling $\overline{CAS}$ edge.
24. Referenced to the latter $\overline{CAS}$ falling edge.
25. All IOs controlled by $\overline{OE}$, regardless $\overline{CASL}$ and $\overline{CASH}$.

Truth Table

FUNCTION		$\overline{RAS}$	$\overline{CASL}$	$\overline{CASH}$	$\overline{WE}$	$\overline{OE}$	ADDRESSES		DQs	NOTES
							t_R	t_C		
Standby		H	H→X	H→X	X	X	X	X	High-Z	
Read : Word		L	L	L	H	L	ROW	COL	Data-Out	
Read : Lower Byte		L	L	H	H	L	ROW	COL	Lower Byte, Data-Out Upper Byte, Data-Out	
Read : Upper Byte		L	H	L	H	L	ROW	COL	Lower Byte, Data-Out , Upper Byte, Data-Out	
Write : Word (Early Write)		L	L	L	L	X	ROW	COL	Data-In	
Write : Lower Byte (Early)		L	L	H	L	X	ROW	COL	Lower Byte, Data-In , Upper Byte, High-Z	
Write : Upper Byte (Early)		L	H	L	L	X	ROW	COL	Lower Byte, High-Z , Upper Byte, Data-In	
Read-Write		L	L	L	H→L	L→H	ROW	COL	Data-Out, Data-In	1, 2
Fast-Page-Mode Read	1st Cycle	L	H→L	H→L	H	L	ROW	COL	Data-Out	2
	2nd Cycle	L	H→L	H→L	H	L		COL	Data-Out	2
Fast-Page-Mode Write	1st Cycle	L	H→L	H→L	L	X	ROW	COL	Data-In	1
	2nd Cycle	L	H→L	H→L	L	X		COL	Data-In	1
Fast-Page-Mode Read-Write	1st Cycle	L	H→L	H→L	H→L	L→H	ROW	COL	Data-Out, Data-In	1, 2
	2nd Cycle	L	H→L	H→L	H→L	L→H		COL	Data-Out, Data-In	1, 2
Hidden Refresh		L→H→L	L	L	H	L	ROW	COL	Data-Out	2
$\overline{RAS}$ -Only Refresh		L	H	H	X	X	ROW		High-Z	
CBR Refresh		H→L	L	L	H	X	X	X	High-Z	3

*Note : 1. These WRITE cycles may also be BYTE WRITE cycles (either $\overline{CASL}$ or $\overline{CASH}$ active).
2. These READ cycles may also be BYTE READ cycles (either $\overline{CASL}$ or $\overline{CASH}$ active).
3. Only one $\overline{CAS}$ must be active ($\overline{CASL}$ or $\overline{CASH}$).

READ CYCLE

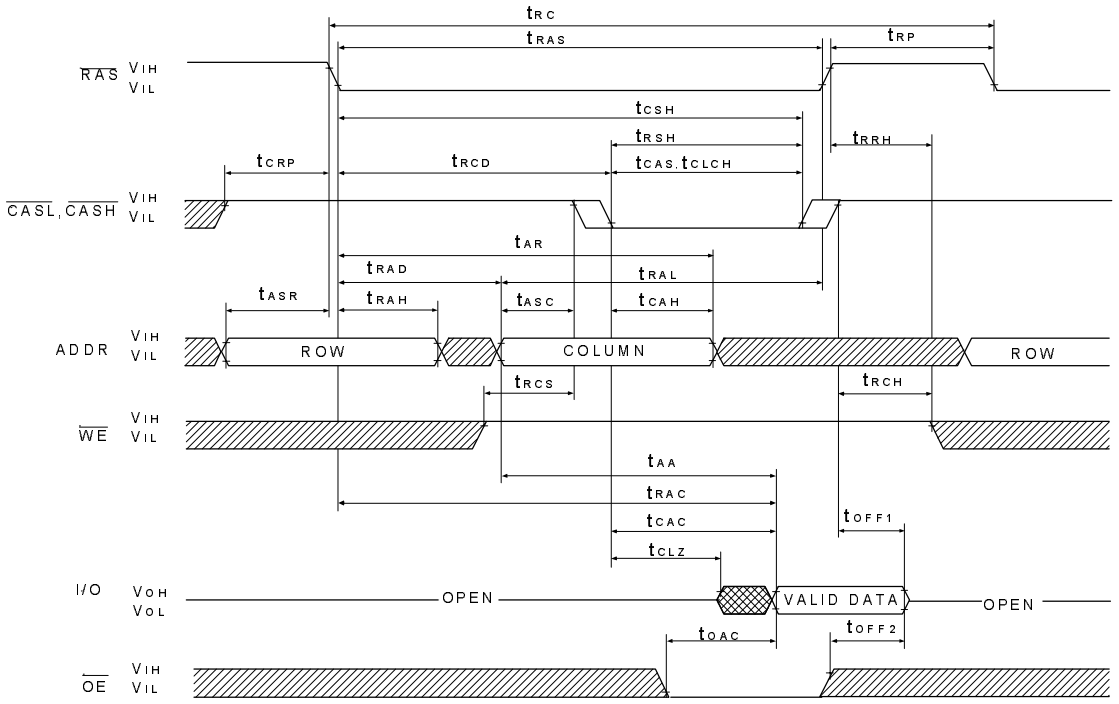

EARLY WRITE CYCLE

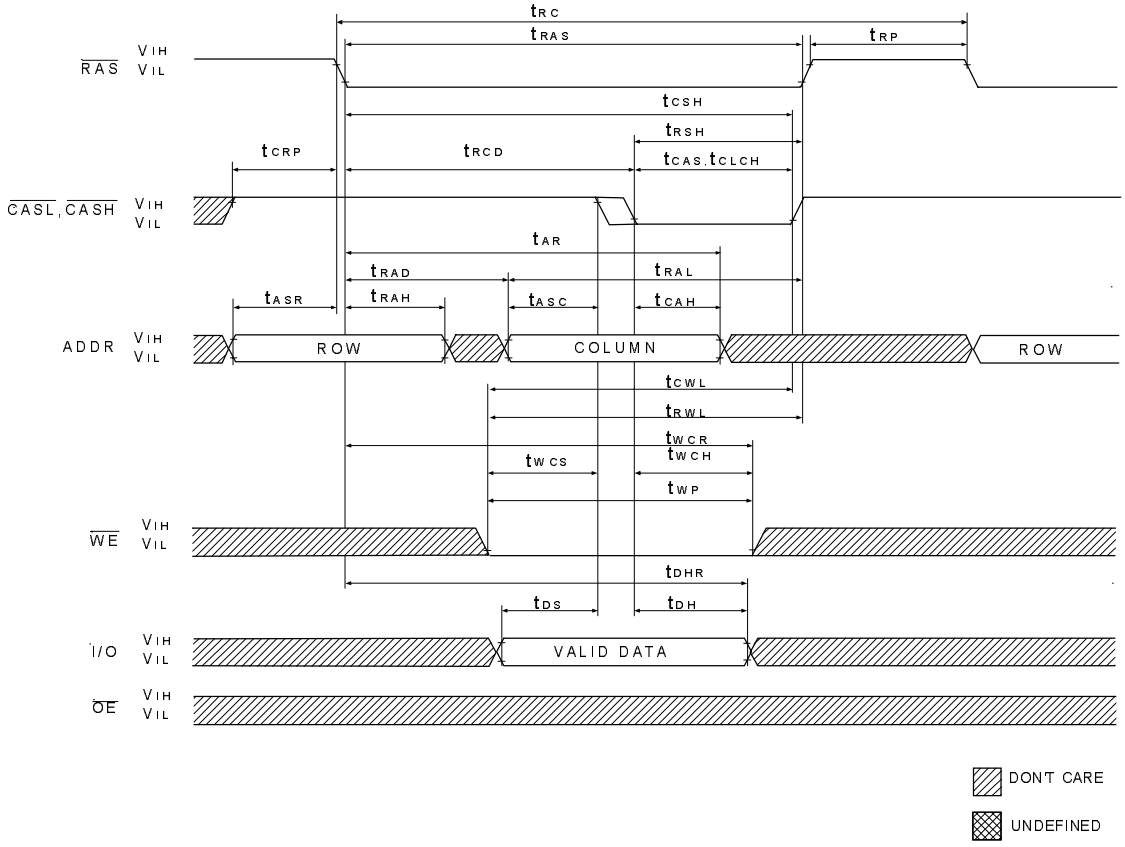

READ WRITE CYCLE

(LATE WRITE and READ-MODIFY-WRITE CYCLES)

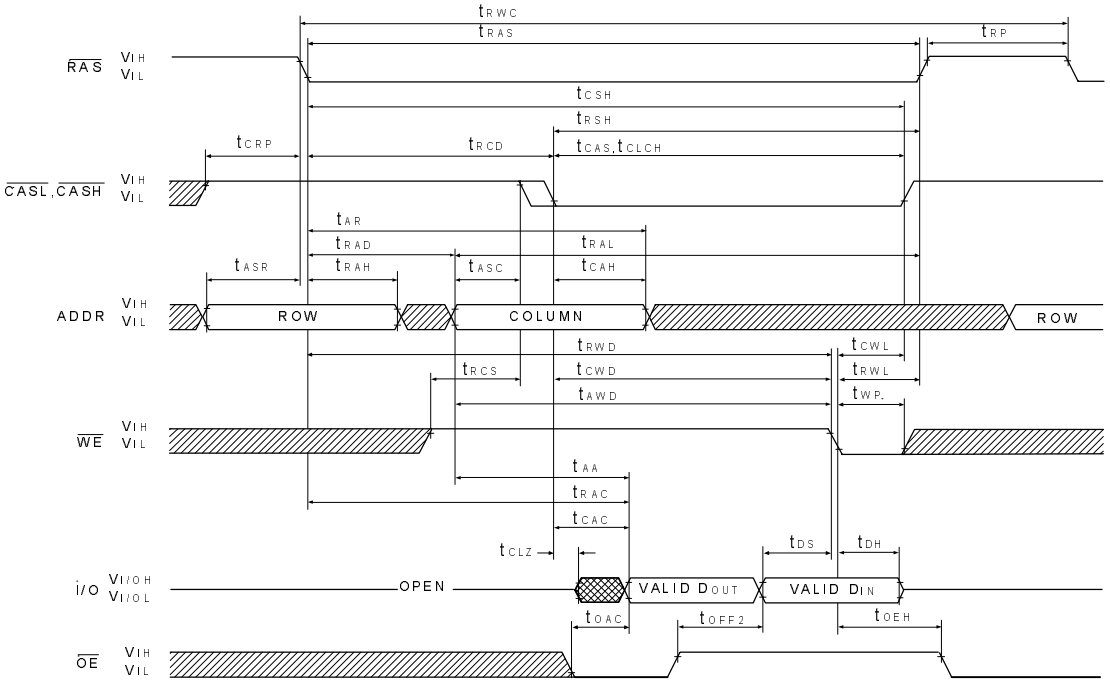

FAST-PAGE-MODE READ CYCLE

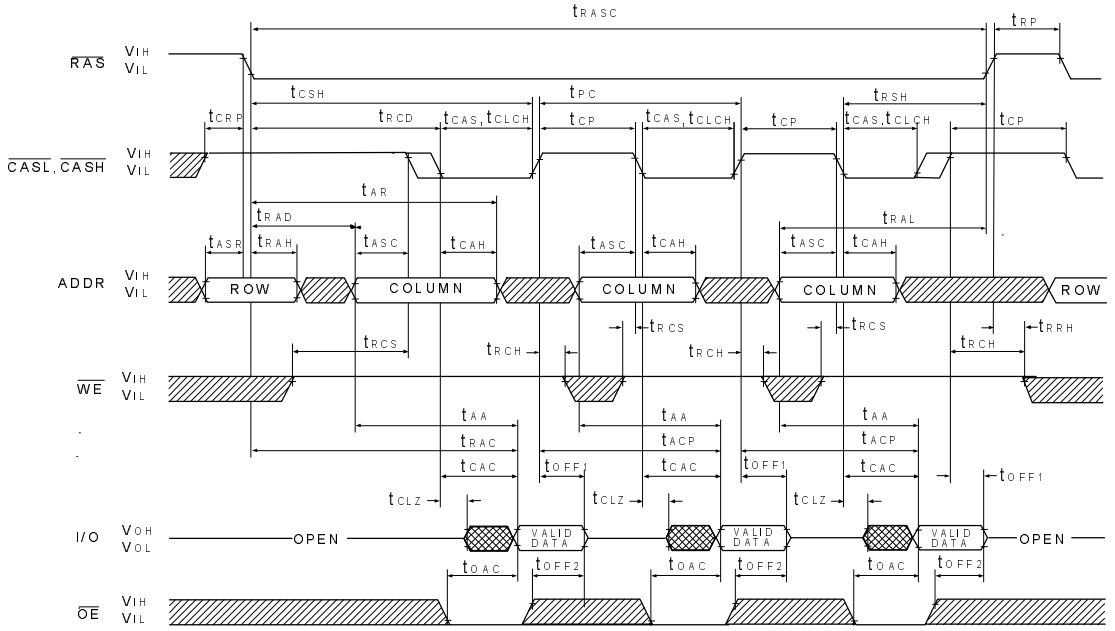

DON'T CARE

UNDEFINED

FAST-PAGE-MODE EARLY-WRITE CYCLE

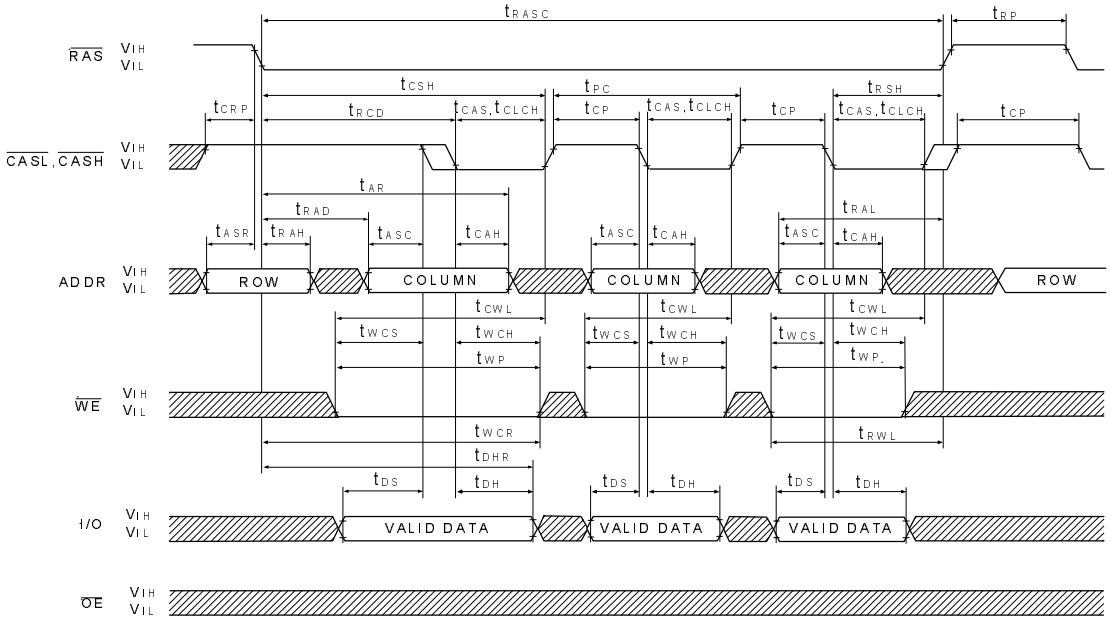

FAST-PAGE-MODE READ-WRITE CYCLE
(LATE WRITE and READ-MODIFY-WRITE CYCLES)

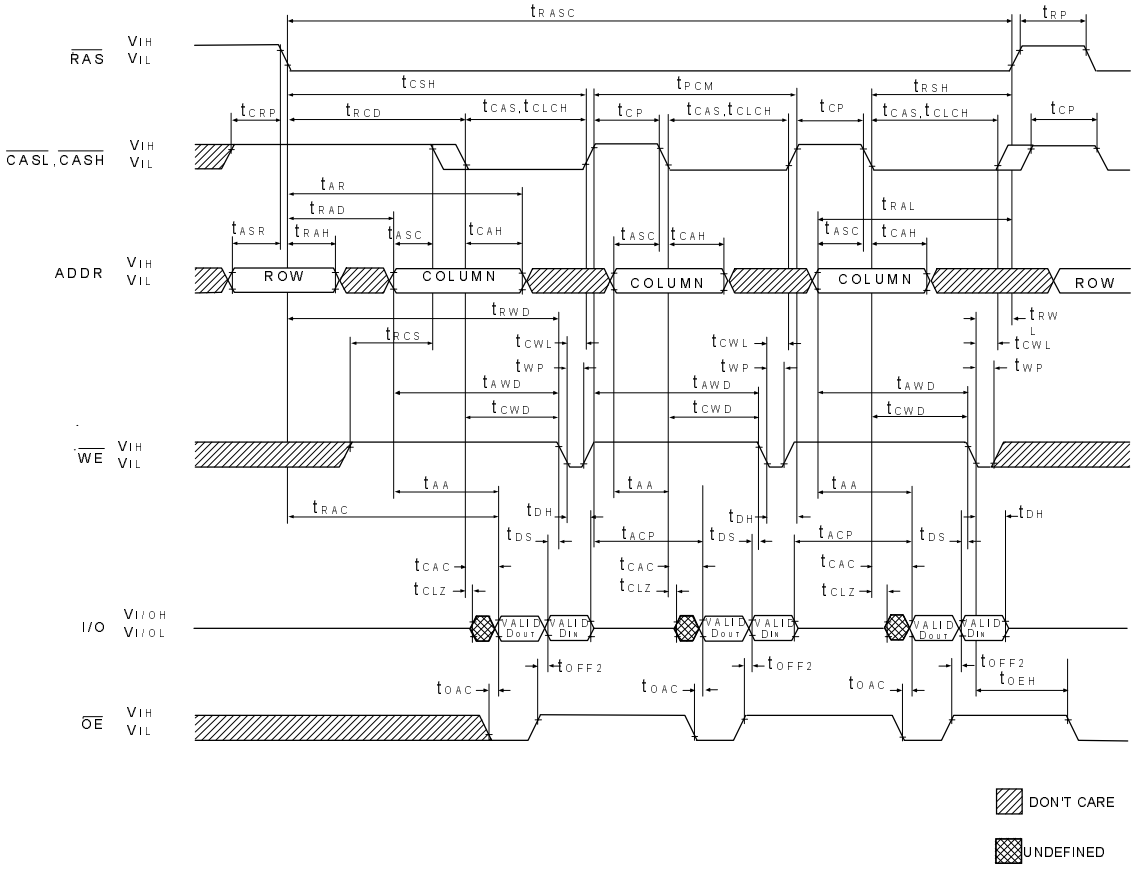

$\overline{RAS}$ ONLY REFRESH CYCLE
(ADDR = A0~A7 ; $\overline{OE}$, $\overline{WE}$ = DON'T CARE)

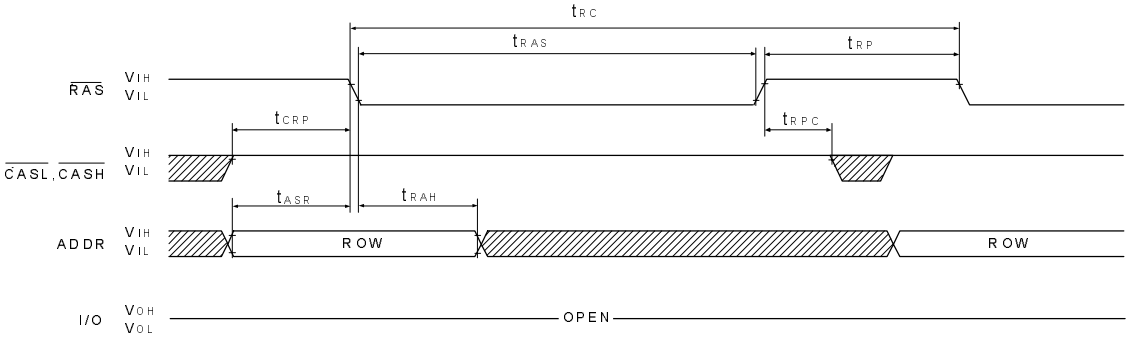

CBR REFRESH CYCLE
(A0~A7 ; $\overline{OE}$ = DON'T CARE)

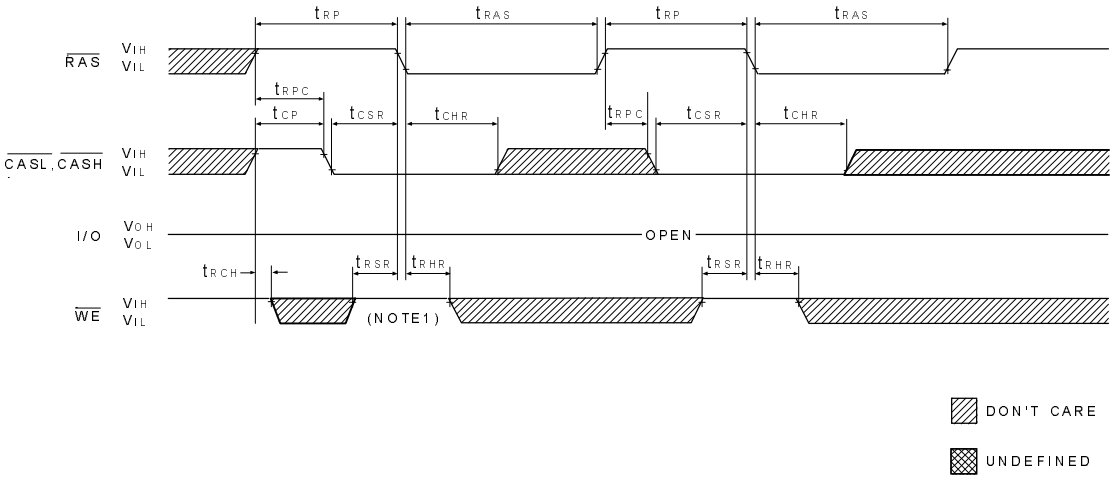

Note : 1. t_{RSR} and t_{RHR} are for system design reference only. The $\overline{WE}$ signal is actually a "don't care" at $\overline{RAS}$ time during a CBR REFRESH. However, $\overline{WE}$ should be held HIGH at $\overline{RAS}$ time during a CBR REFRESH to ensure compatibility with other DRAMs which require $\overline{WE}$ HIGH at $\overline{RAS}$ time during a CBR REFRESH.

HIDDEN REFRESH CYCLE
($\overline{WE}$ = HIGH ; $\overline{OE}$ = LOW)

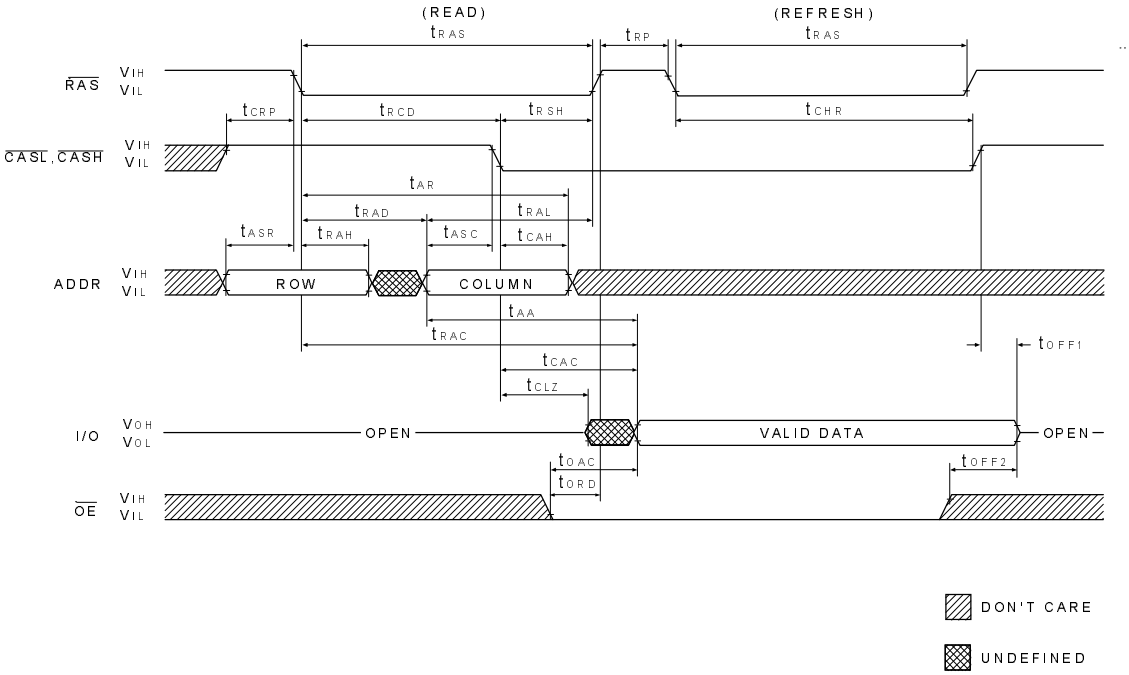

PACKING DIMENSIONS

40-LEAD SOJ(400mil)

SECTIONI

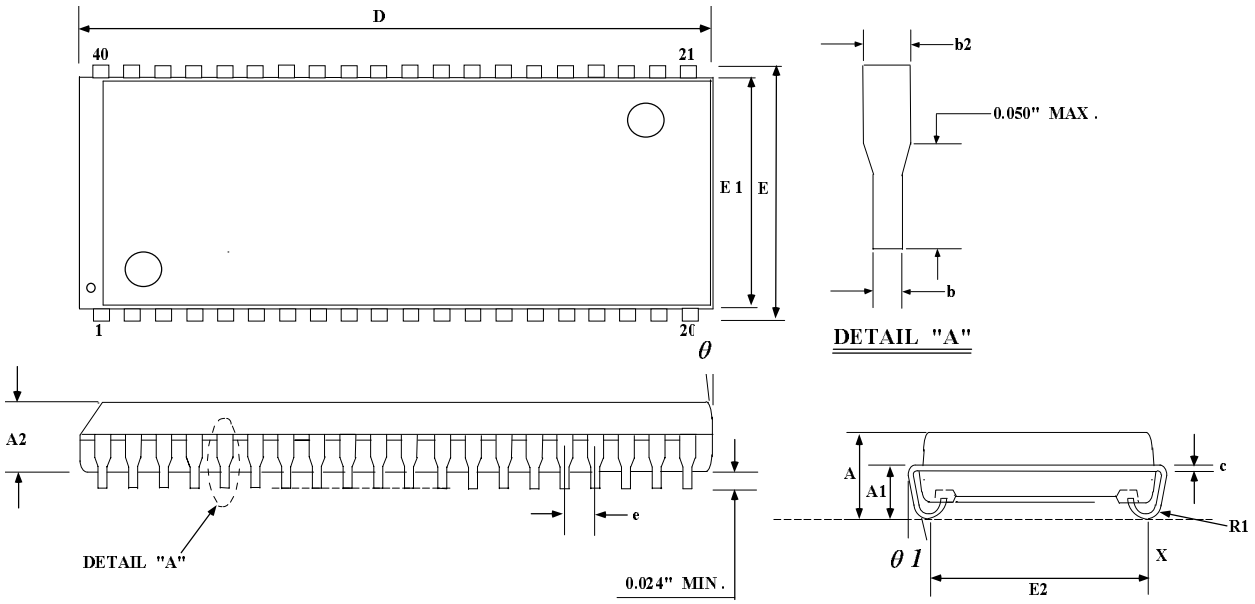

SECTIONII

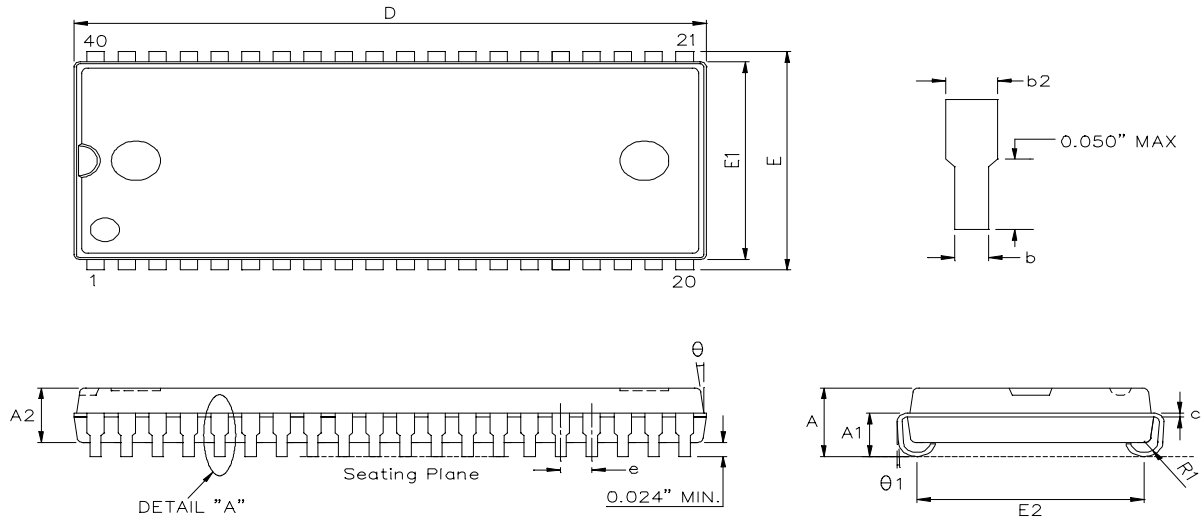

Symbol	Dimension in mm			Dimension in inch			Symbol	Dimension in mm			Dimension in inch		
	Min	Norm	Max	Min	Norm	Max		Min	Norm	Max	Min	Norm	Max
A	3.250	3.510	3.760	0.128	0.138	0.148	E	10.920	11.176	11.430	0.430	0.440	0.450
A1	2.080	___	___	0.082	___	___	E1	10.030	10.160	10.290	0.395	0.400	0.405
A2	2.790 REF			0.110 REF			E2	9.40 BSC			0.370 BSC		
b	0.380	0.460	0.560	0.015	0.018	0.022	R1	0.760	0.890	1.020	0.030	0.035	0.040
b2	0.635 REF			0.025 REF			b2	0.635 REF			0.025 REF		
c	0.180	0.250	0.360	0.007	0.010	0.014	θ1	0°	___	10°	0°	___	10°
e	1.270 BSC			0.050 BSC			e	1.270 BSC			0.050 BSC		
D	25.91	26.040	26.290	1.02	1.025	1.035	y1	___	___	0.381	___	___	0.015

PACKING DIMENSIONS

40 / 44-LEAD TSOP(II) DRAM(400mil)

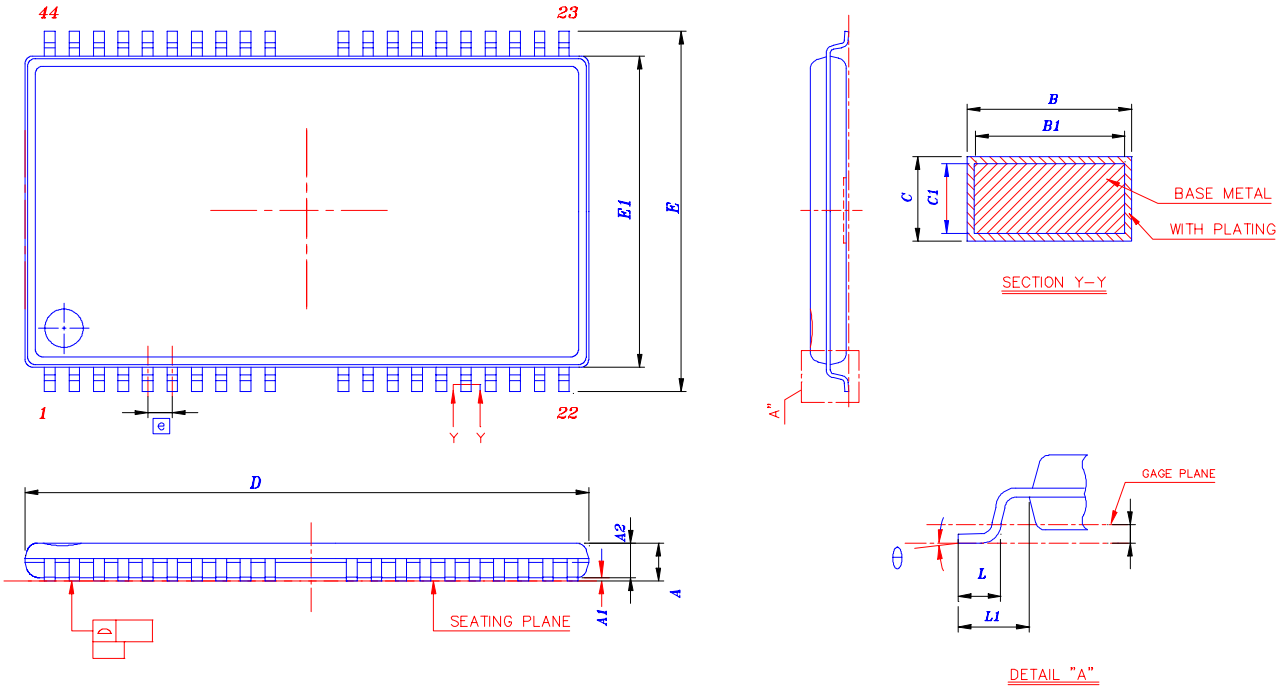

Symbol	Dimension in mm			Dimension in inch		
	Min	Norm	Max	Min	Norm	Max
A	——	——	1.20	——	——	0.047
A1	0.05	——	0.15	0.002	——	0.006
A2	0.95	1.00	1.05	0.037	0.039	0.042
b	0.30	——	0.45	0.012	——	0.018
b1	0.30	0.35	0.40	0.012	0.014	0.016
c	0.12	——	0.21	0.005	——	0.008
c1	0.10	——	0.16	0.004	——	0.006
D	18.28	18.41	18.54	0.720	0.725	0.730
ZD	0.805 REF			0.0317 REF		
E	11.56	11.76	11.96	0.455	0.463	0.471
E1	10.03	10.16	10.29	0.395	0.400	0.4
L	0.40	0.59	0.69	0.016	0.023	0.027
L1	0.80 REF			0.031 REF		
e	0.80 BSC			0.0315 BSC		
θ	O° ~ 7° REF			O° ~ 7° REF		

Important Notice

All rights reserved.

No part of this document may be reproduced or duplicated in any form or by any means without the prior permission of EliteMT.

The contents contained in this document are believed to be accurate at the time of publication. EliteMT assumes no responsibility for any error in this document, and reserves the right to change the products or specification in this document without notice.

The information contained herein is presented only as a guide or examples for the application of our products. No responsibility is assumed by EliteMT for any infringement of patents, copyrights, or other intellectual property rights of third parties which may result from its use. No license, either express , implied or otherwise, is granted under any patents, copyrights or other intellectual property rights of EliteMT or others.

Any semiconductor devices may have inherently a certain rate of failure. To minimize risks associated with customer's application, adequate design and operating safeguards against injury, damage, or loss from such failure, should be provided by the customer when making application designs.

EliteMT's products are not authorized for use in critical applications such as, but not limited to, life support devices or system, where failure or abnormal operation may directly affect human lives or cause physical injury or property damage. If products described here are to be used for such kinds of application, purchaser must do its own quality assurance testing appropriate to such applications.