FAIRCHILD SEMICONDUCTOR®

April 2005

FAN4174/FAN4274
Single and Dual Ultra-Low Cost, Rail-to-Rail I/O, CMOS Amplifiers

Features

- 200µA supply current per amplifier
- 3.7MHz bandwidth
- Output swing to within 10mV of either rail
- Input voltage range exceeds the rails
- 3V/µs slew rate
- 25nV/√Hz input voltage noise
- Replaces KM4170 and KM4270
- FAN4174 competes with OPA340 and TLV2461; available in lead (Pb) free SC70-5 and SOT23-5 packages
- FAN4274 competes with OPA2340 and TLV2462; available in lead (Pb) free MSOP-8 package
- Fully specified at +2.7V and +5V supplies

Applications

- Portable/battery-powered applications
- PCMCIA, USB
- Mobile communications, cellular phones, pagers
- Notebooks and PDA's
- Sensor interface
- A/D buffer
- Active filters
- Signal conditioning
- Portable test instruments

Typical Application Diagram

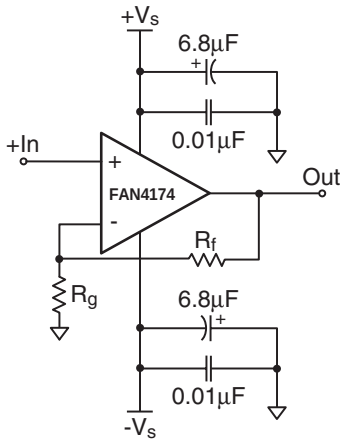

Description

The FAN4174 (single) and FAN4274 (dual) are ultra-low cost, voltage feedback amplifiers with CMOS inputs that consume only 200µA of supply current per amplifier while providing ±33mA of output short circuit current. These amplifiers are designed to operate from 2.5V to 5V supplies. The common mode voltage range extends beyond the negative and positive rails.

The FAN4174 and FAN4274 are designed on a CMOS process and provide 3.7MHz of bandwidth and 3V/µs of slew rate at a supply voltage of 5V. The combination of low power, rail-to-rail performance, low voltage operation, and tiny package options make this amplifier family well suited for use in many general purpose and battery powered applications.

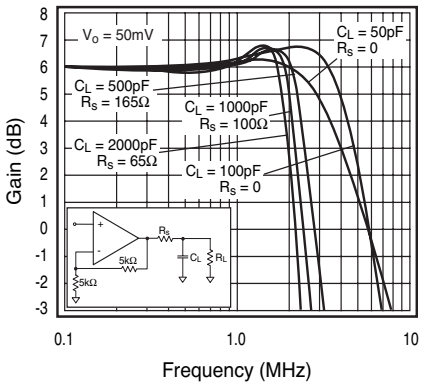

©2005 Fairchild Semiconductor Corporation

FAN4174 Pin Configurations

SOT23

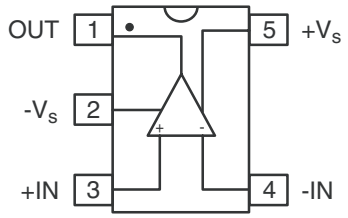

SC70

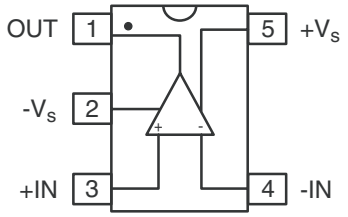

FAN4174 Pin Assignments

Pin#	Pin	Description
1	OUT	Output
2	-Vs	Negative Supply
3	+IN	Positive Supply
4	-IN	Negative Input
5	+Vs	Positive Supply

FAN4274 Pin Configuration

MSOP-8

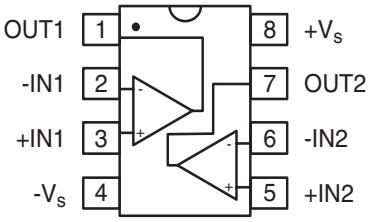

FAN4274 Pin Assignments

Pin#	Pin	Description
1	OUT1	Output, Channel 1
2	-IN1	Negative Input, Channel 1
3	+IN1	Positive Input, Channel 1
4	-Vs	Negative Supply
5	+IN2	Positive Input, Channel 2
6	-IN2	Negative Input, Channel 2
7	OUT2	Output, Channel 2
8	+Vs	Positive Supply

Reliability Information

Parameter	Min.	Typ.	Max.	Unit
Junction Temperature			150	°C
Storage Temperature Range	-65		+150	°C
Lead Temperature (Soldering, 10s)			+300	°C
Thermal Resistance (θ_{JA}), 5 Lead SOT23[1]		256		°C/W
Thermal Resistance (θ_{JA}), 5 Lead SC70[1]		331		°C/W
Thermal Resistance (θ_{JA}), 8 Lead MSOP[1]		206		°C/W

Note:

1. Package thermal resistance (θ_{JA}), JEDEC standard, multi-layer test boards, still air.

Absolute Maximum Ratings

Parameter	Min.	Max.	Unit
Supply Voltage	0	6	V
Input Voltage Range	$-V_S$ -0.5	$+V_S$ +0.5	V

Note:

Functional operation under any of these conditions is NOT implied. Performance and reliability are guaranteed only if operating conditions are not exceeded.

Recommended Operating Conditions

Parameter	Min.	Typ.	Max.	Unit
Operating Temperature Range	-40		+85	°C

Electrical Specifications at +2.7V

(V_S = +2.7V, G = 2, R_L = 10kΩ to V_S/2, R_F = 5kΩ; unless otherwise noted)

Symbol	Parameter	Conditions	Min	Typ	Max	Units
	Frequency Domain Response					
UGBW	-3dB Bandwidth	G = +1		4		MHz
BW_{SS}	-3dB Bandwidth			2.5		MHz
GBWP	Gain Bandwidth product			4		MHz
	Time Domain Response					
t_R, t_F	Rise and Fall Time	V_o = 1.0V step		300		ns
OS	Overshoot	V_o = 1.0V step		5		%
SR	Slew Rate	V_o = 3V step, G = -1		3		V/µs
	Distortion and Noise Response					
HD2	2nd Harmonic Distortion	V_o =1V_{pp}, 10kHz		-66		dBc
HD3	3rd Harmonic Distortion	V_o =1V_{pp}, 10kHz		-67		dBc
THD	Total Harmonic Distortion	V_o =1V_{pp}, 10kHz		0.1		%
e_n	Input Voltage Noise			26		nV/√Hz
X_{TALK}	Crosstalk (FAN4274)	100kHz		-100		dB
	DC Performance					
V_{IO}	Input Offset Voltage[1]		-6	0	+6	mV
dV_{IO}	Average Drift			2.1		µV/°C
I_{bn}	Input Bias Current			5		pA
PSRR	Power Supply Rejection Ratio[1]	DC	50	73		dB
A_{OL}	Open Loop Gain	DC		98		dB
I_S	Supply Current Per Amplifier[1]			200	300	µA
	Input Characteristics					
R_{IN}	Input Resistance			10		GΩ
C_{IN}	Input Capacitance			1.4		pF
CMIR	Input Common Mode Voltage Range	typical (FAN4174)		-0.3 to 2.6		V
		typical (FAN4274)		-0.3 to 3.0		V
CMRR	Common Mode Rejection Ratio[1]	DC, V_{CM} = 0V to 2.2V for FAN4174	50	65		dB
		DC, V_{CM} = 0V to 2.7V for FAN4274	50	65		dB
	Output Characteristics					
V_O	Output Voltage Swing[1]	R_L = 10kΩ to V_S/2	0.03	0.01 to 2.69	2.65	V
		R_L = 1kΩ to V_S/2		0.05 to 2.55		V
I_{SC}	Short Circuit Output Current			+34/-12		mA
V_S	Power Supply Operating Range			2.5 to 5.5		V

Notes:

1. 100% tested at 25°C.

Electrical Specifications at +5V

(V_S = +5V, G = 2, R_L = 10kΩ to V_S/2, R_F = 5kΩ; unless otherwise noted)

Symbol	Parameter	Conditions	Min	Typ	Max	Units
	Frequency Domain Response					
UGBW	-3dB Bandwidth	G = +1		3.7		MHz
BW_{SS}	-3dB Bandwidth			2.3		MHz
GBWP	Gain Bandwidth product			3.7		MHz
	Time Domain Response					
t_R, t_F	Rise and Fall Time	V_o = 1.0V step		300		ns
OS	Overshoot	V_o = 1.0V step		5		%
SR	Slew Rate	V_o = 3V step, G = -1		3		V/µs
	Distortion and Noise Response					
HD2	2nd Harmonic Distortion	V_o =1V_{pp}, 10kHz		-80		dBc
HD3	3rd Harmonic Distortion	V_o =1V_{pp}, 10kHz		-80		dBc
THD	Total Harmonic Distortion	V_o =1V_{pp}, 10kHz		0.02		%
e_n	Input Voltage Noise			25		nV/√Hz
X_{TALK}	Crosstalk (FAN4274)	100kHz		-100		dB
	DC Performance					
V_{IO}	Input Offset Voltage[1]		-8	0	+8	mV
dV_{IO}	Average Drift			2.9		µV/°C
I_{bn}	Input Bias Current			5		pA
PSRR	Power Supply Rejection Ratio[1]	DC	50	73		dB
A_{OL}	Open Loop Gain	DC		102		dB
I_S	Supply Current Per Amplifier[1]			200	300	µA
	Input Characteristics					
R_{IN}	Input Resistance			10		GΩ
C_{IN}	Input Capacitance			1.2		pF
CMIR	Input Common Mode Voltage Range	typical		-0.3 to 5.3		V
CMRR	Common Mode Rejection Ratio[1]	DC, V_{CM} = 0V to V_S	58	73		dB
	Output Characteristics					
V_O	Output Voltage Swing[1]	R_L = 10kΩ to V_S/2	0.03	0.01 to 4.99	4.95	V
		R_L = 1kΩ to V_S/2		0.1 to 4.9		V
I_{SC}	Short Circuit Output Current			±33		mA
V_S	Power Supply Operating Range			2.5 to 5.5		V

Notes:

1. 100% tested at 25°C.

Typical Performance Characteristics

(V_S = +2.7, G = 2, R_L = 10kΩ to V_S/2, R_F = 5kΩ; unless otherwise noted)

Figure 1. Non-Inverting Freq. Response (+5V)

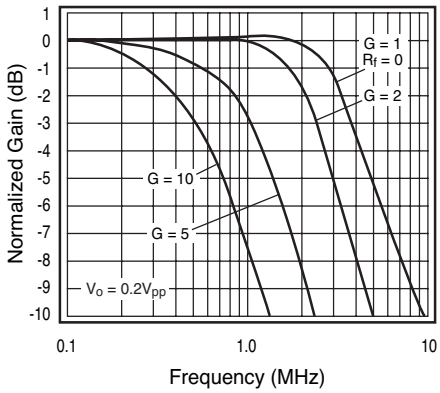

Figure 2. Inverting Freq. Response (+5V)

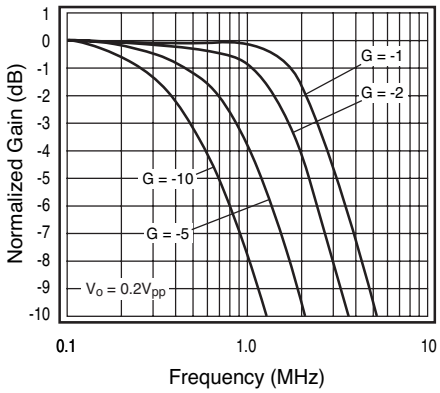

Figure 3. Non-Inverting Freq. Response

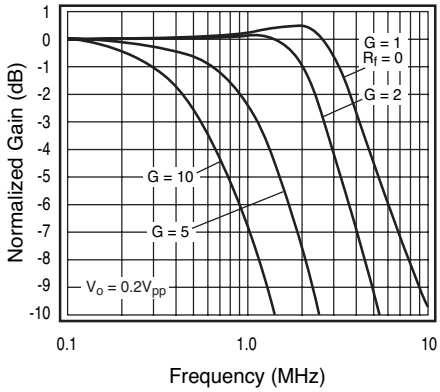

Figure 4. Inverting Freq. Response

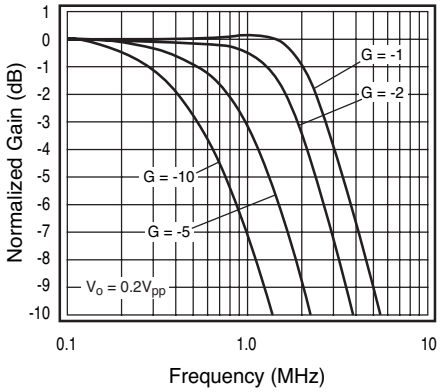

Figure 5. Frequency Response vs. C_L

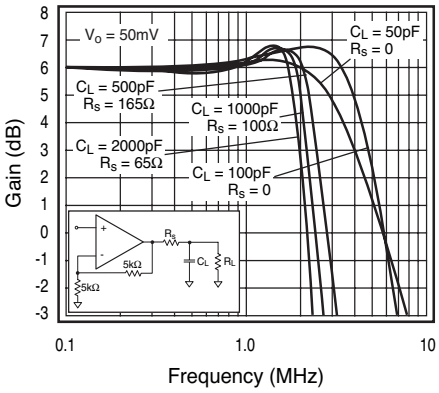

Figure 6. Frequency Response vs. R_L

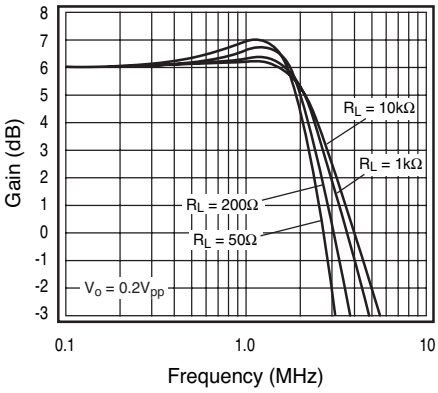

Typical Performance Characteristics

(V_S = +2.7V, G = 2, R_L = 10kΩ to V_S/2, R_F = 5kΩ; unless otherwise noted)

Figure 7. Large Signal Freq. Response (+5V)

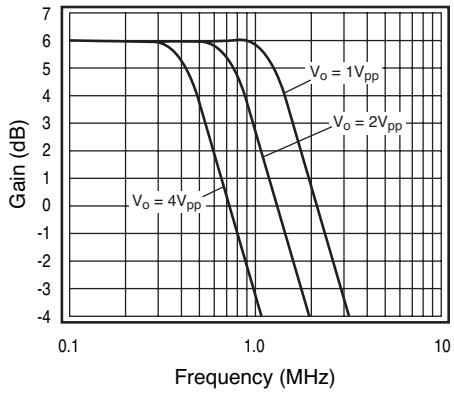

Figure 8. Open Loop Gain and Phase vs. Freq.

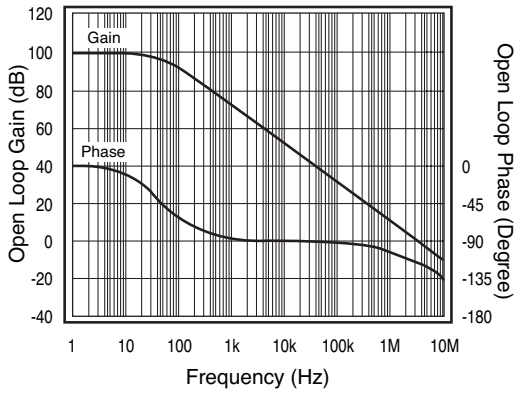

Figure 9. 2nd & 3rd Harmonic Distortion

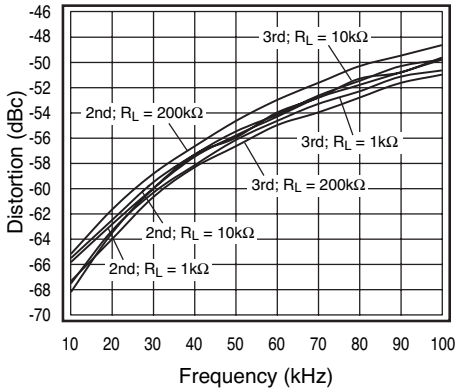

Figure 10. 2nd Harmonic Distortion vs. V_o

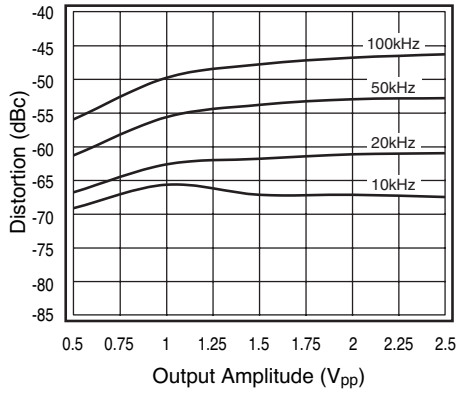

Figure 11. 3rd Harmonic Distortion vs. V_o

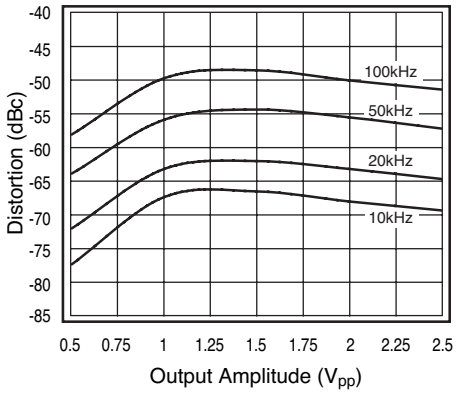

Figure 12. CMRR V_S = 5V

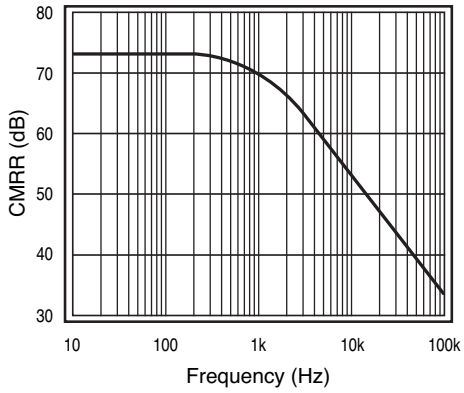

Typical Performance Characteristics

(V_S = +2.7V, G = 2, R_L = 10kΩ to V_S/2, R_F = 5kΩ; unless otherwise noted)

Figure 13. PSRR V_S = 5V

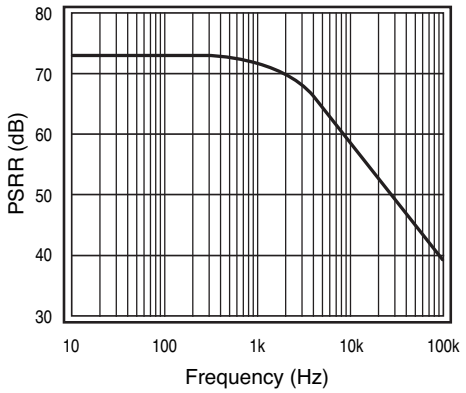

Figure 14. Output Swing vs. Load

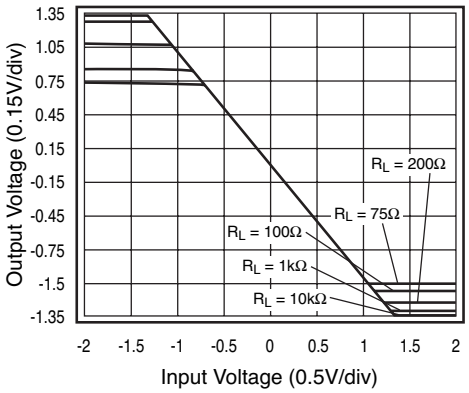

Figure 15. Pulse Resp. vs. Common Mode Voltage

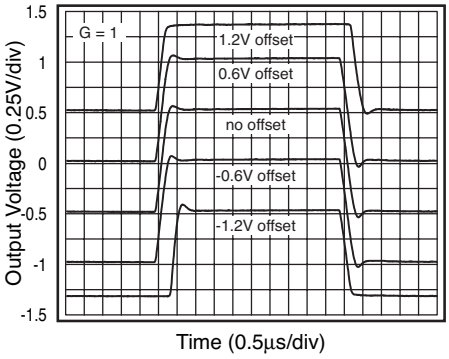

Figure 16. Input Voltage Noise

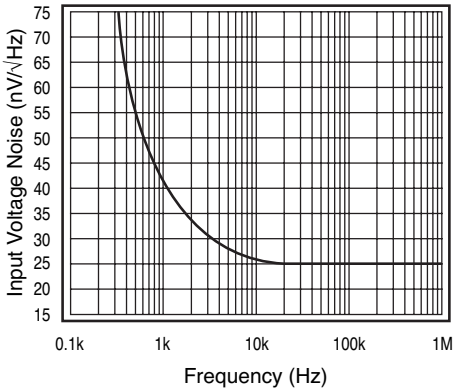

Application Information

General Description

The FAN4174 amplifier family are single supply, general purpose, voltage-feedback amplifiers. Fabricated on a bi-CMOS process. The family features a rail-to-rail input and output and is unity gain stable.

The typical non-inverting circuit schematic is shown in Figure 1.

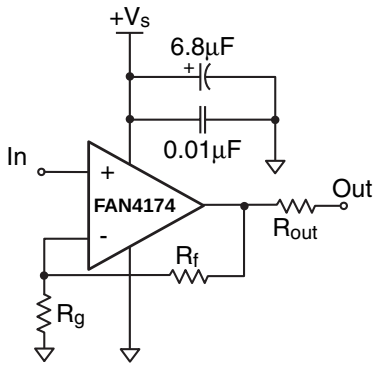

Figure 1. Typical Non-inverting Configuration

Input Common Mode Voltage

The common mode input range extends to 300mV below ground and to 100mV above Vs, in single supply operation. Exceeding these values will not cause phase reversal. However, if the input voltage exceeds the rails by more than 0.5V, the input ESD devices will begin to conduct. The output will stay at the rail during this overdrive condition. If the absolute maximum input voltage (700mV beyond either rail) is exceeded, externally limit the input current to ±5mA as shown in Figure 2.

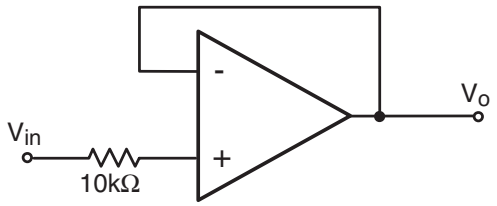

Figure 2. Circuit for Input Current Protection

Power Dissipation

The maximum internal power dissipation allowed is directly related to the maximum junction temperature. If the maximum junction temperature exceeds 150°C, some performance degradation will occur. If the maximum junction temperature exceeds 150°C for an extended time, device failure may occur.

Overdrive Recovery

Overdrive of an amplifier occurs when the output and/or input ranges are exceeded. The recovery time varies based on whether the input or output is overdriven and by how much the ranges are exceeded. The FAN4174 will typically recover in less than 500ns from an overdrive condition.
Figure 3 shows the FAN4174 amplifier in an overdriven condition.

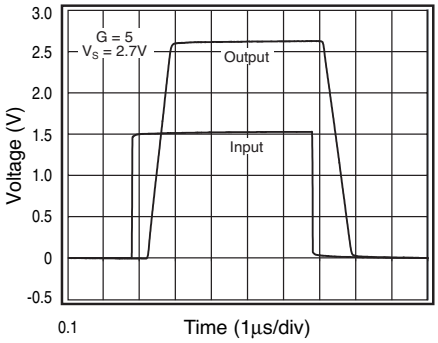

Figure 3. Overdrive Recovery

Driving Capacitive Loads

The *Frequency Response vs. C_L* plot, illustrates the response of the FAN4174 amplifier family. A small series resistance (R_S) at the output of the amplifier, illustrated in Figure 4, will improve stability and settling performance. R_S values in the *Frequency Response vs. C_L* plot were chosen to achieve maximum bandwidth with less than 2dB of peaking. For maximum flatness, use a larger R_S. Capacitive loads larger than 500pF require the use of R_S.

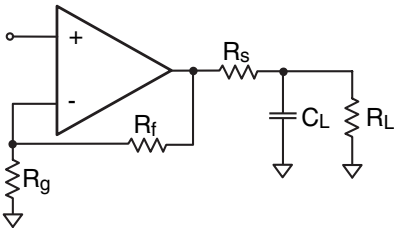

Figure 4. Typical Topology for driving a capacitive load

Driving a capacitive load introduces phase-lag into the output signal, which reduces phase margin in the amplifier. The unity gain follower is the most sensitive configuration. In a unity gain follower configuration, the FAN4174 amplifier family requires a 300Ω series resistor to drive a 100pF load.

Layout Considerations

General layout and supply bypassing play major roles in high frequency performance. Fairchild has evaluation boards to use as a guide for high frequency layout and as an aid in device testing and characterization. Follow the steps below as a basis for high frequency layout:

- Include 6.8µF and 0.01µF ceramic capacitors
- Place the 6.8µF capacitor within 0.75 inches of the power pin
- Place the 0.01µF capacitor within 0.1 inches of the power pin
- Remove the ground plane under and around the part, especially near the input and output pins to reduce parasitic capacitance
- Minimize all trace lengths to reduce series inductances

Refer to the evaluation board layouts shown in Figure 6 for more information.

When evaluating only one channel, complete the following on the unused channel:

1. Ground the non-inverting input
2. Short the output to the inverting input

Evaluation Board Information

The following evaluation boards are available to aid in the testing and layout of this device:

Eval Bd	Description	Products
KEB002	Single Channel, Dual Supply, 5 and 6 lead SOT23	FAN4174IS5X
KEB010	Dual Channel, Dual Supply 8 lead MSOP	FAN4274IMU8X
KEB011	Single Channel, Dual Supply, 5 and 6 lead SC70	FAN4174IP5X

Evaluation board schematics are shown in Figures 5a and 5b, layouts are shown in Figure 6a through 6d.

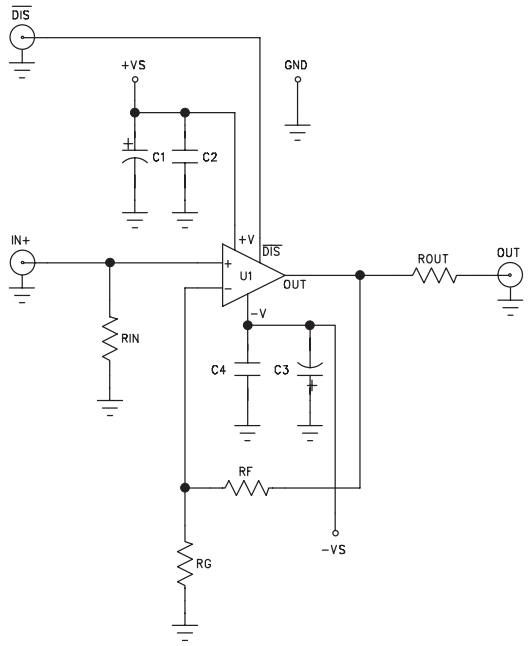

Figure 5a. FAN4174 Evaluation Board Schematic (KEB002/KEB011)

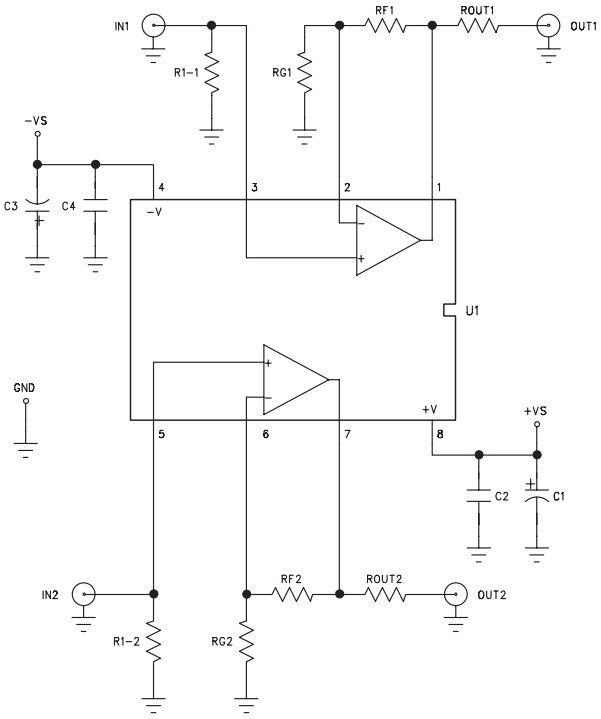

Figure 5b. FAN4274 Evaluation Board Schematic (KEB010)

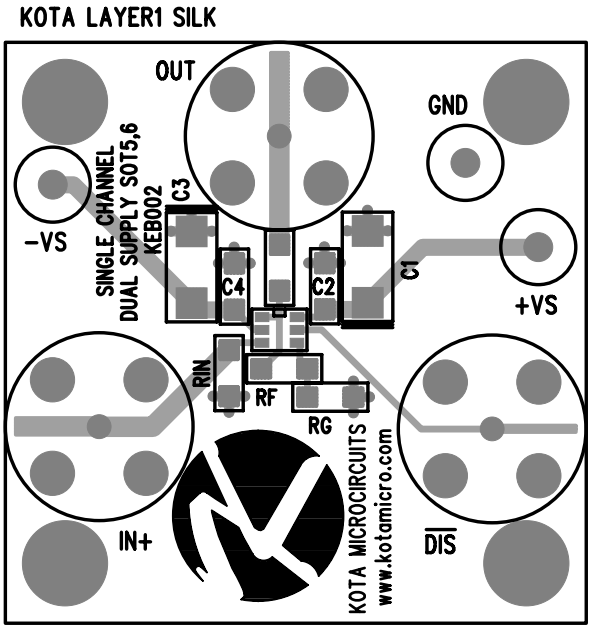

Figure 6a: KEB002 (top side)

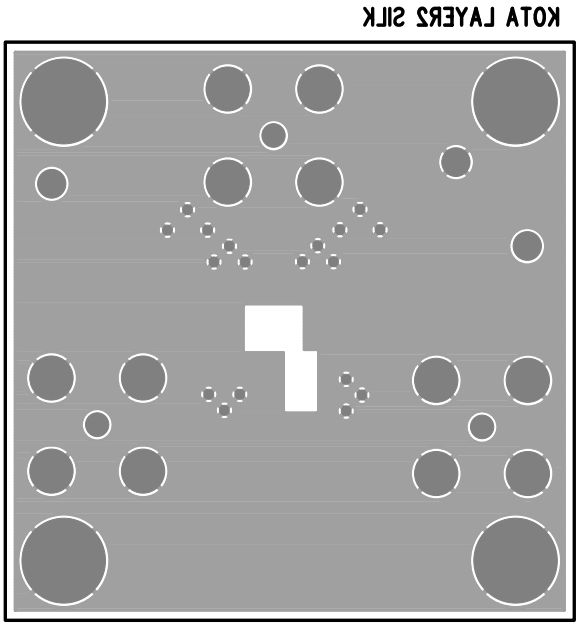

Figure 6b: KEB002 (bottom side)

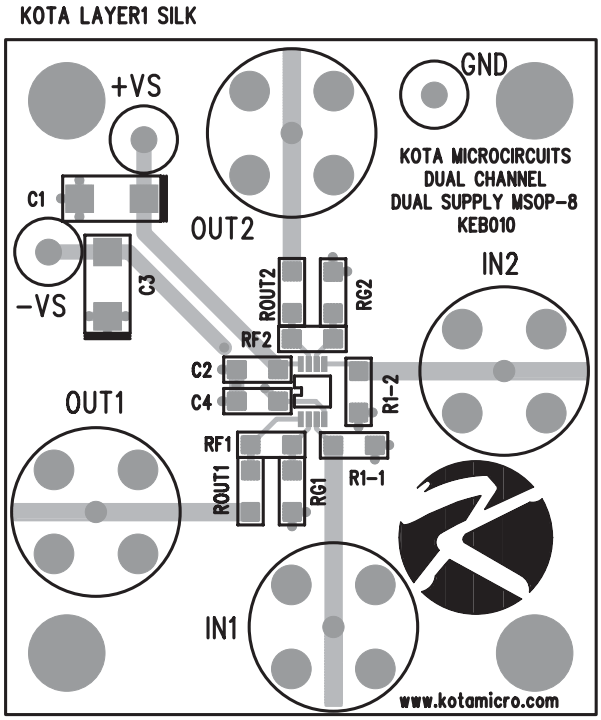

Figure 6c: KEB010 (top side)

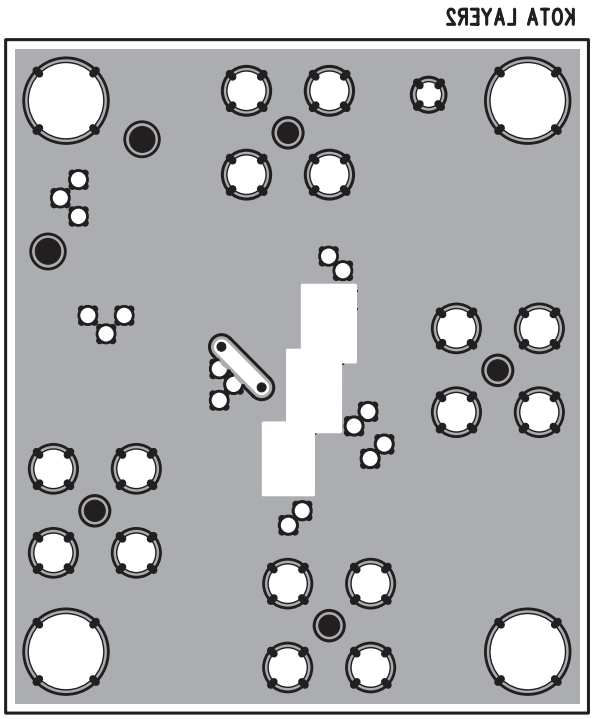

Figure 6d: KEB010 (bottom side)

Mechanical Dimensions

SOT-23

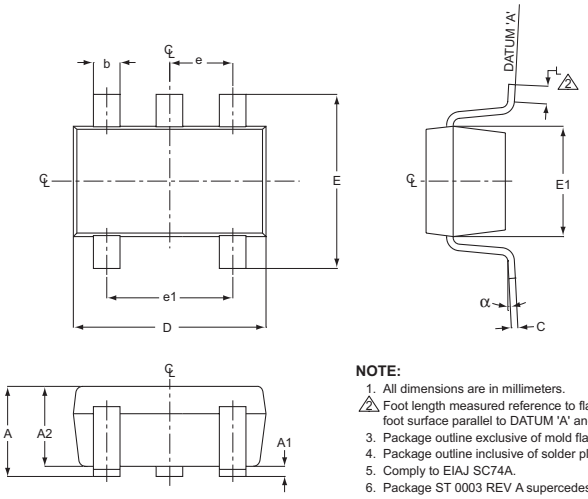

SYMBOL	MIN	MAX
A	0.90	1.45
A1	0.00	0.15
A2	0.90	1.30
b	0.25	0.50
C	0.09	0.20
D	2.80	3.10
E	2.60	3.00
E1	1.50	1.75
L	0.35	0.55
e	0.95 ref	
e1	1.90 ref	
α	0°	10°

NOTE:

1. All dimensions are in millimeters.
2. Foot length measured reference to flat foot surface parallel to DATUM 'A' and lead surface.
3. Package outline exclusive of mold flash & metal burr.
4. Package outline inclusive of solder plating.
5. Comply to EIAJ SC74A.
6. Package ST 0003 REV A supercedes SOT-D-2005 REV C.

SC70

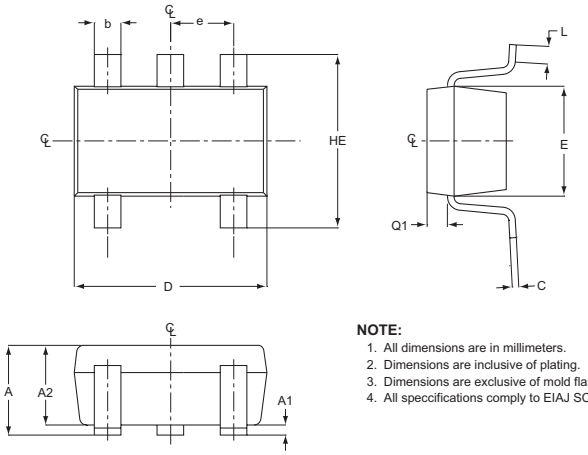

SYMBOL	MIN	MAX
e	0.65 BSC	
D	1.80	2.20
b	0.15	0.30
E	1.15	1.35
HE	1.80	2.40
Q1	0.10	0.40
A2	0.80	1.00
A1	0.00	0.10
A	0.80	1.10
c	0.10	0.18
L	1.10	0.30

NOTE:

1. All dimensions are in millimeters.
2. Dimensions are inclusive of plating.
3. Dimensions are exclusive of mold flashing and metal burr.
4. All speccifications comply to EIAJ SC70.

MSOP

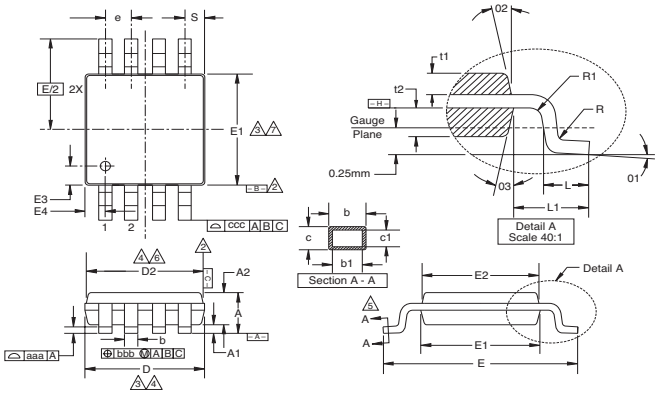

MSOP-8		
SYMBOL	MIN	MAX
A	1.10	–
A1	0.10	0.05
A2	0.86	0.08
D	3.00	0.10
D2	2.95	0.10
E	4.90	0.15
E1	3.00	0.10
E2	2.95	0.10
E3	0.51	0.13
E4	0.51	0.13
R	0.15	+0.15/-0.06
R1	0.15	+0.15/-0.06
t1	0.31	0.08
t2	0.41	0.08
b	0.33	+0.07/-0.08
b1	0.30	0.05
c	0.18	0.05
c1	0.15	+0.03/-0.02
01	3.0	3.0
02	12.0	3.0
03	12.0	3.0
L	0.55	0.15
L1	0.95 BSC	–
aaa	0.10	–
bbb	0.08	–
ccc	0.25	–
e	0.65 BSC	–
S	0.525 BSC	–

NOTE:

1 All dimensions are in millimeters (angle in degrees), unless otherwise specified.
2 Datums – B – and – C – to be determined at datum plane – H –.
3 Dimensions "D" and "E1" are to be determined at datum – H –.
4 Dimensions "D2" and "E2" are for top package and dimensions "D" and "E1" are for bottom package.
5 Cross sections A – A to be determined at 0.13 to 0.25mm from the leadtip.
6 Dimension "D" and "D2" does not include mold flash, protrusion or gate burrs.
7 Dimension "E1" and "E2" does not include interlead flash or protrusion.

Ordering Information

Model	Part Number	Lead Free	Package	Container	Pack Qty.
FAN4174	FAN4174IS5X_NL	Yes	SOT23-5	Reel	3000
FAN4174	FAN4174IP5X_NL	Yes	SC70-5	Reel	3000
FAN4274	FAN4274IMU8X	Yes	MSOP-8	Reel	3000

Temperature Range: -40°C to +85°C

TRADEMARKS

The following are registered and unregistered trademarks Fairchild Semiconductor owns or is authorized to use and is not intended to be an exhaustive list of all such trademarks.

ACEx™	FAST®	IntelliMAX™	POP™	SPM™
ActiveArray™	FASTr™	ISOPLANAR™	Power247™	Stealth™
Bottomless™	FPS™	LittleFET™	PowerEdge™	SuperFET™
CoolFET™	FRFET™	MICROCOUPLER™	PowerSaver™	SuperSOT™-3
CROSSVOLT™	GlobalOptoisolator™	MicroFET™	PowerTrench®	SuperSOT™-6
DOME™	GTO™	MicroPak™	QFET®	SuperSOT™-8
EcoSPARK™	HiSeC™	MICROWIRE™	QS™	SyncFET™
E^2CMOS™	I^2C™	MSX™	QT Optoelectronics™	TinyLogic®
EnSigna™	*i-Lo*™	MSXPro™	Quiet Series™	TINYOPTO™
FACT™	ImpliedDisconnect™	OCX™	RapidConfigure™	TruTranslation™
FACT Quiet Series™		OCXPro™	RapidConnect™	UHC™
Across the board. Around the world.™		OPTOLOGIC®	µSerDes™	UltraFET®
The Power Franchise®		OPTOPLANAR™	SILENT SWITCHER®	UniFET™
Programmable Active Droop™		PACMAN™	SMART START™	VCX™

DISCLAIMER

FAIRCHILD SEMICONDUCTOR RESERVES THE RIGHT TO MAKE CHANGES WITHOUT FURTHER NOTICE TO ANY PRODUCTS HEREIN TO IMPROVE RELIABILITY, FUNCTION OR DESIGN. FAIRCHILD DOES NOT ASSUME ANY LIABILITY ARISING OUT OF THE APPLICATION OR USE OF ANY PRODUCT OR CIRCUIT DESCRIBED HEREIN; NEITHER DOES IT CONVEY ANY LICENSE UNDER ITS PATENT RIGHTS, NOR THE RIGHTS OF OTHERS.

LIFE SUPPORT POLICY

FAIRCHILD'S PRODUCTS ARE NOT AUTHORIZED FOR USE AS CRITICAL COMPONENTS IN LIFE SUPPORT DEVICES OR SYSTEMS WITHOUT THE EXPRESS WRITTEN APPROVAL OF FAIRCHILD SEMICONDUCTOR CORPORATION.
As used herein:

1. Life support devices or systems are devices or systems which, (a) are intended for surgical implant into the body, or (b) support or sustain life, or (c) whose failure to perform when properly used in accordance with instructions for use provided in the labeling, can be reasonably expected to result in significant injury to the user.

2. A critical component is any component of a life support device or system whose failure to perform can be reasonably expected to cause the failure of the life support device or system, or to affect its safety or effectiveness.

PRODUCT STATUS DEFINITIONS

Definition of Terms

Datasheet Identification	Product Status	Definition
Advance Information	Formative or In Design	This datasheet contains the design specifications for product development. Specifications may change in any manner without notice.
Preliminary	First Production	This datasheet contains preliminary data, and supplementary data will be published at a later date. Fairchild Semiconductor reserves the right to make changes at any time without notice in order to improve design.
No Identification Needed	Full Production	This datasheet contains final specifications. Fairchild Semiconductor reserves the right to make changes at any time without notice in order to improve design.
Obsolete	Not In Production	This datasheet contains specifications on a product that has been discontinued by Fairchild semiconductor. The datasheet is printed for reference information only.

Rev. I15