OKI electronic components

OL391N, OL392N, OL397N, OL3492N, OL3497N

Hight Temperature Operation 1.3 μm Laser-Diode Coaxial Module

GENERAL DESCRIPTION

The OL391N, OL392N, OL397N, OL3492N, and OL3497N are 1.3 μm, MQW InGaAsP / InP laser diode coaxial modules with single-mode fiber pigtails. These modules are optimal light sources for high-capacity long-haul optical transmission systems.

FEATURES

- Single-mode fiber output: Pf=1 mW
- Includes monitor photodiode for power control
- High speed
- Multi-quantum-well (MQW) structure

APPLICATIONS

- Line transmission systems
- Subscriber loops
- Optical measuring instruments

PACKAGE DIMENSIONS (Unit: mm)

• OL391N

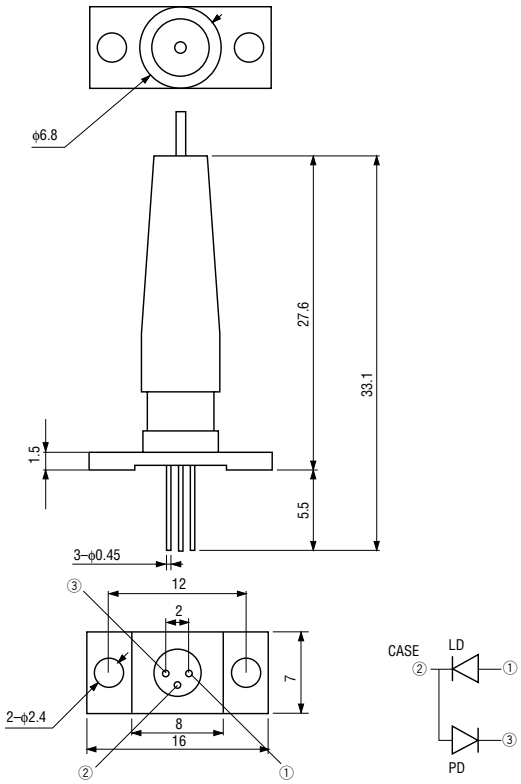

• OL392N, OL397N

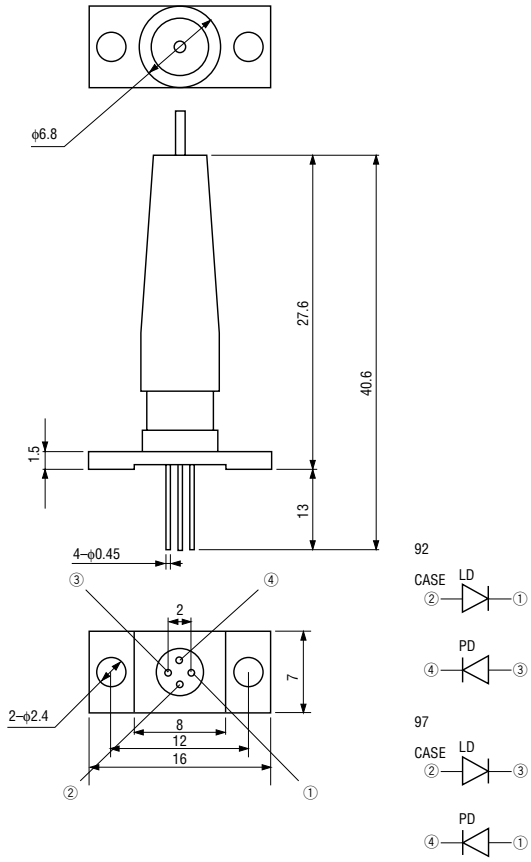

PACKAGE DIMENSIONS (Continued)

- **OL3492N, OL3497N**

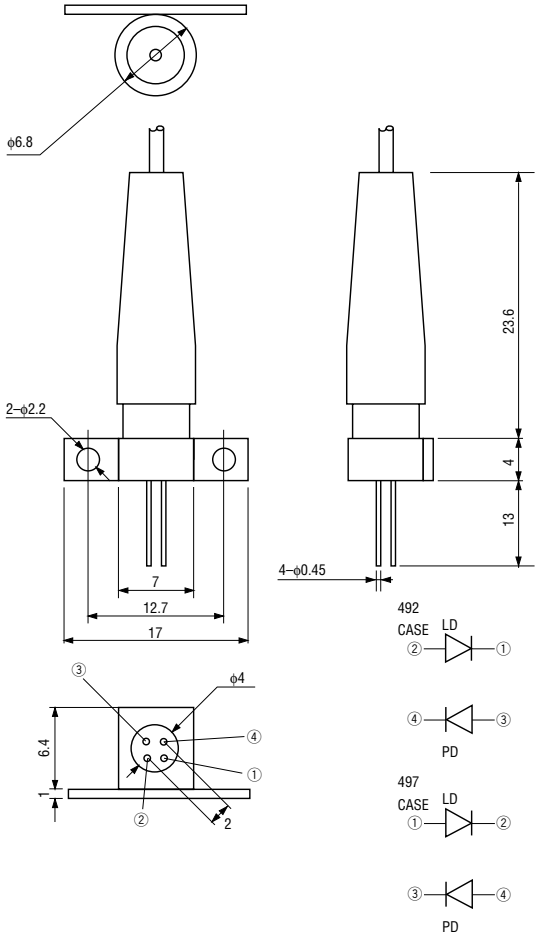

ABSOLUTE MAXIMUM RATINGS

Parameter	Symbol	Test Conditions	Ratings	Unit
Fiber Output	Pf	Ta=25°C	2	mW
LD Reverse Voltage	V_R (LD)		2	V
PD Reverse Voltage	V_R (PD)		20	V
PD Forward Current	I_F (PD)		10	mA
Operating Temperature	T_{opr}	—	–40 to +85	°C
Storage Temperature	T_{stg}	—	–40 to +85	°C

OPTICAL AND ELECTRICAL CHARACTERISTICS

(Ta=25°C)

Parameter	Symbol	Test Conditions	Min.	Typ.	Max.	Unit
Threshold Current	Ith	—	—	10	20	mA
Fiber Output Power	Pf	I_F=Ith+20 mA	1.0	—	—	mW
Center Wavelength	λc	Pf=1 mW	1280	1310	1340	nm
Spectral Width	σ	Pf=1 mW, RMS	—	—	5	nm
Rise Time	t_r	Ibias=Ith	—	—	0.5	ns
Fall Time	t_f	Pf=1 mW	—	—	0.5	ns
Forward Voltage	V_F	Pf=1 mW	—	—	1.5	V
PD Dark Current	I_{DARK}	V_R(PD)=5 V	—	—	20	nA
Monitor Current	Im	Pf=1 mW	50	—	—	μA

TYPICAL CHARACTERISTICS

Fiber Output Power vs. Forward Current

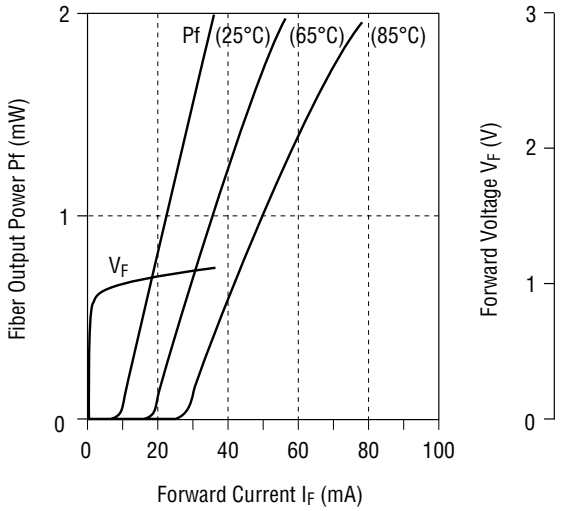
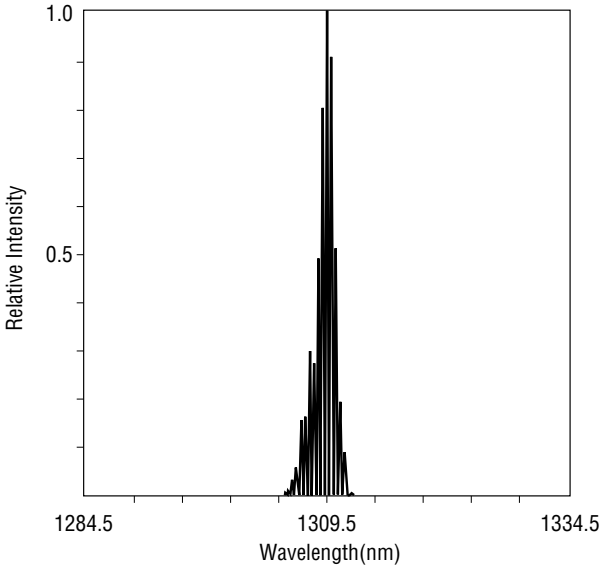
Oscillation Spectrum (Ta=25°C)