Isolated mV/Thermocouple Signal Conditioner

1B51

FEATURES

Functionally Complete Precision Conditioner
High Accuracy
- **Low Input Offset Tempco: ±0.1μV/°C**
- **Low Nonlinearity: ±0.025%**
- **High CMR: 160dB (60Hz, G=1000V/V)**

High CMV Isolation: 1500V rms Continuous
240V rms Input Protection
Small Package: 1.0″×2.1″×0.35″ DIP
Isolated Power
Low Pass Filter (f_C=3Hz)
Pin Compatible with 1B41 Isolated RTD Conditioner

APPLICATIONS

Multichannel Thermocouple Temperature Measurement
Low Level Data Acquisition Systems
Industrial Measurement & Control Systems

FUNCTIONAL BLOCK DIAGRAM

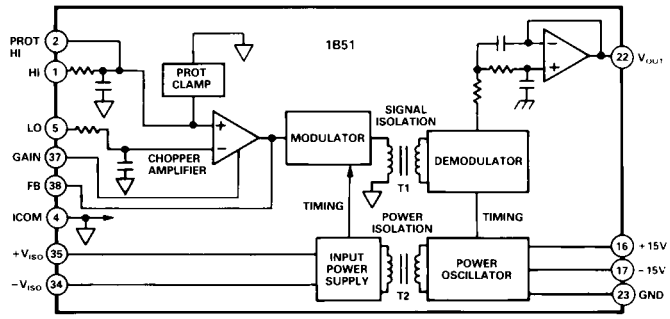

GENERAL DESCRIPTION

The 1B51 is a precision, mV/thermocouple signal conditioner that incorporates a circuit design utilizing transformer based isolation and automated surface mount manufacturing technology. It provides an unbeatable combination of versatility and performance in a compact plastic package. Designed for measurement and control applications, it is specially suited for harsh environments with extremely high common-mode interference. Unlike costlier solutions that require separate dc/dc converters, each 1B51 generates its own input side power, providing true, low cost channel-to-channel isolation.

Functionally, the signal conditioner consists of three basic sections: chopper stabilized amplifier, isolation and output filter. The chopper amplifier features a highly stable offset tempco of ±0.1μV/°C and resistor programmable gains from 2 to 1000. Wide range zero suppression can be implemented at this stage.

The isolation section has complete input to output galvanic isolation of 1500V rms continuous using transformer coupling techniques. Isolated power of 2mA at ±6.2V is provided for ancillary circuits such as zero suppression and open-input detection. Filtering at 3Hz is implemented by a passive antialiasing filter at the front end and a two-pole active filter at the output. Overall NMR is 60dB and CMR is 160dB min @ 60Hz, G=1000.

The 1B51 is specified over −25°C to +85°C and operates over the industrial (−40°C to +85°C) temperature range.

DESIGN FEATURES AND USER BENEFITS

High Noise Rejection: The combination of a chopper stabilized front end with a low pass filter provides high system accuracy in harsh industrial environments as well as excellent rejection of 50/60Hz noise.

Input Protection: The input is internally protected against continuous application of 240V rms.

Low Cost: The 1B51 offers a very low cost per channel for high performance, isolated, low level signal conditioners.

Wide Range Zero Suppression: This input referred function is a convenient way to null large input offsets.

Low Pass Filter: The three pole active filter (f_C=3Hz) reduces 60Hz noise and aliasing errors.

Small Size: The 1B51 package size (1.0″×2.1″×0.35″) and functional completeness make it an excellent choice in systems with limited board space and clearance.

1B51 — SPECIFICATIONS (typical @ +25°C and V_S = ±15V unless otherwise noted)

Model	1B51AN	1B51BN
GAIN		
Gain Equation	$G=\left[1+\frac{R_{FB}}{R_G}\right] \times 2$	*
Gain Error	1% max	*
Gain Temperature Coefficient[1]	50ppm/°C	*
Gain Nonlinearity	±0.035% (±0.05% max)	±0.025% (±0.04% max)
OFFSET VOLTAGES		
Input Offset Voltage		
Initial, @ +25°C (Adjustable to Zero)	25μV (100μV max)	*
vs. Temperature	±0.1μV/°C (±0.5μV/°C max)	*
vs. Time, Noncumulative	±1μV/month max	*
Output Offset Voltage		
Initial	−50mV	−25mV
vs. Temperature	−175μV/°C	−50μV/°C
INPUT OFFSET CURRENT		
Initial	0.6nA (2.5nA max)	*
vs. Temperature	±2.5pA/°C (12.5pA/°C max)	*
INPUT BIAS CURRENT		
Initial @ +25°C	10nA	*
vs. Temperature	10pA/°C	*
INPUT IMPEDANCE		
Power On	50MΩ	*
Power Off	40kΩ min	*
INPUT VOLTAGE RANGE		
Linear Differential Input	±10mV to ±5V	*
Max CMV, Input to Output		
ac, 60Hz, Continuous	1500V rms	*
Continuous, dc	±2000V	*
CMR @ 60Hz, 1kΩ Source Imbalance, G = 1000	160dB min	*
NMR @ 60Hz	60dB min	*
Transient Protection	IEEE-STD 472 (SWC)	*
INPUT NOISE		
Voltage, 0.1Hz to 10Hz, 1kΩ Source Imbalance	1μV p-p	*
RATED OUTPUT		
Voltage, 2kΩ Load, min	±10V	*
Current	±5mA	*
Output Noise, dc to 100kHz	1mV p-p	*
Impedance, dc	0.1Ω	*
FREQUENCY RESPONSE		
Bandwidth, −3dB	dc to 3Hz	*
ISOLATED POWER		
Voltage, No Load	±6.2V±5%	*
Current	2mA	*
Regulation, No Load to Full Load	7.5%	*
Ripple	250mV p-p	*
POWER SUPPLY		
Voltage, Rated Performance	±15V dc	*
Voltage, Operating	±13.5V to ±18V	*
Current, Quiescent	+12mA @ +15V, −4mA @ −15V	*
PSRR	0.1%/V	*
ENVIRONMENTAL		
Temperature Range		
Rated Performance	−25°C to +85°C	*
Operating	−40°C to +85°C	*
Storage	−40°C to +85°C	*
Relative Humidity	0 to 95% @ +60°C	*
CASE SIZE	1.00″×2.10″×0.35″ (25.4×53.3×8.9)mm	*

NOTES
*Specifications same as 1B51AN.
[1]See graph in text.
Specifications subject to change without notice.

OUTLINE DIMENSIONS

Dimensions shown in inches and (mm).

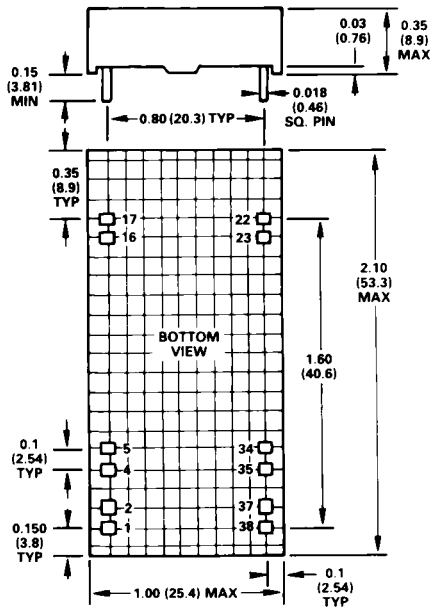

PIN DESIGNATIONS

PIN	DESIGNATION
1	HI
2	PROT HI
4	ICOM
5	LO
16	+15V
17	−15V
22	V_O
23	GND
34	$-V_{ISO}$
35	$+V_{ISO}$
37	GAIN
38	FB

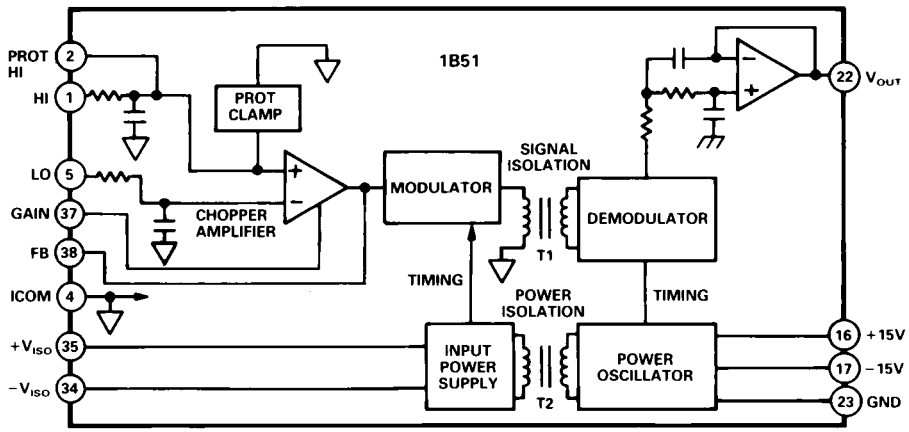

Functional Block Diagram

INSIDE THE 1B51

Referring to the functional block diagram, the ±15V power inputs provide power to both the output side circuitry and the power oscillator. The 25kHz power oscillator provides the timing information for the signal demodulator and drives power transformer T2 for the input side power supplies. The secondary winding of T2 is half wave rectified and filtered to create the input side bipolar unregulated supplies.

The signal input (HI) is single-pole filtered for noise rejection and antialiasing. The protection clamps limit the voltage at PROT HI to ±8V. Thus, a large voltage applied between HI and input common (I COM) appears mostly across the input resistor.

The chopper stabilized gain stage amplifies the differential input voltage with a gain set by external resistors. The voltage at the inverting input of the chopper stabilized amplifier (LO) should be equal to the input voltage at which the desired output voltage is zero. This is a true input referred zero suppression function.

The signal is amplitude modulated onto a 25kHz carrier and passed through the signal transformer T1. The synchronous demodulator restores the signal to the baseband. A two-pole active low pass stage filters out clock noise and completes a three-pole Butterworth filter formed with the input pole.

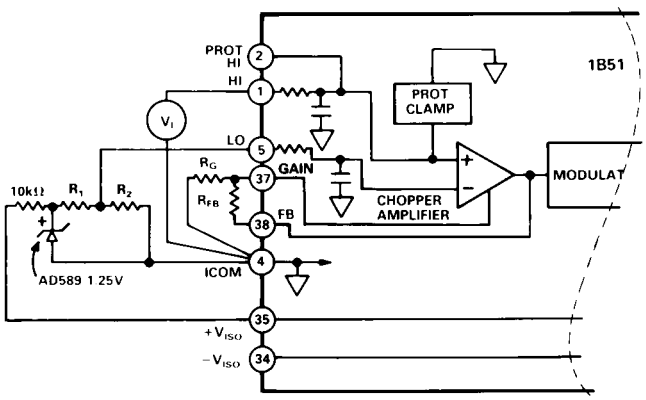

Figure 1. Input Gain Setting and Zero Supression

USING THE 1B51

Gain Setting:

The gain of the 1B51 is controlled on the input side by a pair of user provided resistors (see Figure 1). A feedback resistor of between 10kΩ and 20kΩ is required between the feedback pin (FB) and the gain pin. The gain setting resistor is connected between the gain pin and input side common (ICOM). The gain equation is

$$G = \left[1 + \frac{R_{FB}}{R_G}\right] \times 2$$

Gains of 2–1000 can be achieved by adjusting this ratio.

The accuracy of the resistor values must be taken into account when calculating the initial gain accuracy of an application. The initial accuracy of the 1B51 must then be added to the resistor errors to predict the total accuracy. Likewise, the ratiometric temperature coefficient of the gain and feedback resistors must be added to the temperature coefficient of the 1B51 to predict the total resulting thermal drift.

It is possible to use a trimming potentiometer to correct for initial gain and system gain errors. The feedback resistor can be comprised of a resistor in series with a trimming potentiometer, as long as the total resistance remains between 10kΩ and 20kΩ. Alternatively, the gain resistor can also be an adjustable resistor. In general, the greater the trim range, the coarser the resolution.

Zero Suppression:

Since the 1B51 is a differential input device, true input referred zero suppression can be accomplished (see Figure 1). A voltage reference powered by the input side power supplies is applied to the LO terminal. Since the transfer function is

$$V_O = (V(HI) - V(LO)) \times GAIN$$

the input voltage for which the desired output is zero should be applied to the LO pin. The equation is

$$V_Z = 1.25(R_2/(R_1 + R_2))$$

Any drift of this input zero suppression voltage appears as offset drift, so a temperature stable reference should be used. The source impedance at the LO terminal should be kept below 1kΩ.

Open Input Detection:
The 1B51 can sense an open thermocouple or broken input line with the addition of an external resistor. By connecting a 220MΩ resistor between the HI pin and the positive or negative isolated supply, an open input will cause a positive or negative full scale output, respectively.

To preserve the normal mode input protection capability of the 1B51, the resistor must be able to withstand 220Vac. A high voltage rating can be obtained by connecting lower value resistors in series.

Cold Junction Compensation:
When using a thermocouple as an input to the 1B51, a second thermocouple junction is formed at the terminations of the thermocouple wires, commonly referred to as the cold junction. The measured output voltage of the sensor is the voltage generated by the thermocouple minus the voltage generated by the cold junction.

Since thermocouples are specified with 0V representing 0°C, it would be ideal to maintain the cold junction at 0°C. A more practical approach involves adding a temperature dependent voltage to the thermocouple signal so as to oppose the cold junction effects. This type of correction is known as cold junction compensation.

Many different methods are commonly used to implement cold junction compensation. Usually a thermistor or a semiconductor sensor is used to generate the cold junction voltage. The slope of the cold junction voltage must be the same as that of the thermocouple. Therefore, the cold junction compensation depends on the thermocouple type.

Sometimes, one cold junction compensation sensor is used by a number of thermocouple channels. This is accomplished by measuring the temperature of the connection block directly, and adding the appropriate voltage to each uncompensated thermocouple channel after the gain has been taken. *In all cases, the cold junction sensor must be in the thermal proximity with the connection block.*

Figure 2 shows a monolithic cold junction compensation device used with the 1B51. The Analog Devices AC1226 measures the ambient temperature and generates the appropriate cold junction voltage for several different thermocouple types.

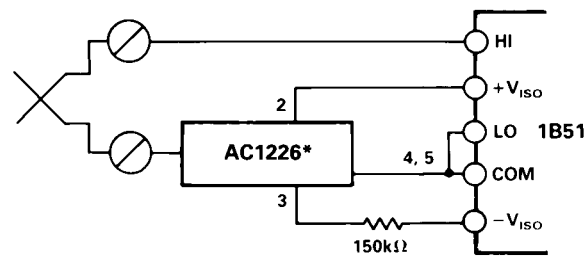

*PIN NUMBER DEPENDS ON THERMOCOUPLE TYPE. SEE AC1226 DATA SHEET FOR DETAILS.

Figure 2. 1B51 Cold Junction Compensation

TYPICAL PERFORMANCE CURVES (@T_A = +25°C, V_S = ±15V)

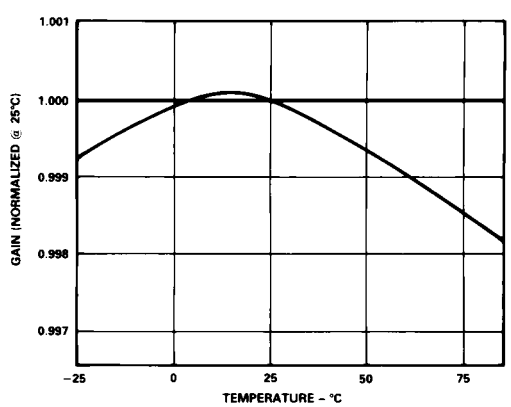

Gain vs. Temperature

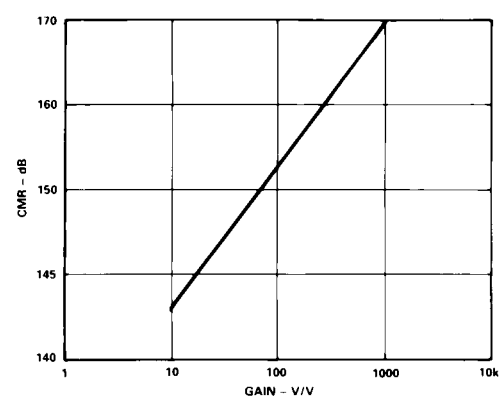

CMR vs. Gain

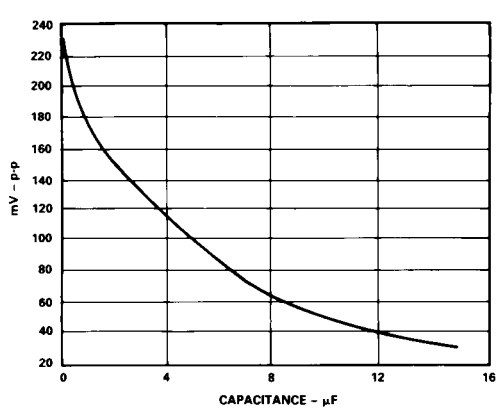

$+V_{ISO}$ Ripple vs. Capacitance

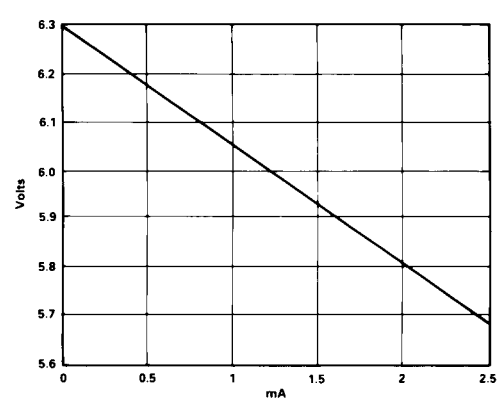

$+V_{ISO}$ vs. Load