TOSHIBA BIPOLAR LINEAR INTEGRATED CIRCUIT SILICON MONOLITHIC

TA8229K

LOW FREQUENCY POWER AMPLIFIER

TA8229K is an audio power IC with built-in two channels developed for portable radio cassette tape recorder with power ON / OFF switch.
Because of the parts reduction and SIP (Single Inline Package), space merit is remarkable.
Thermal shut down protection circuit is built in.

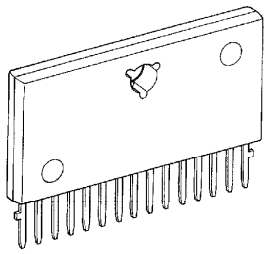

HSIP15-P-2.00A

Weight : 3.9 g (Typ.)

FEATURES

- High Power
  : $P_{out(1)}$ = 2.5 W (Typ.)
  (V_{CC} = 9 V, R_L = 4 Ω, f = 1 kHz, THD = 10%)
  : $P_{out(2)}$ = 4.6 W (Typ.)
  (V_{CC} = 12 V, R_L = 4 Ω, f = 1 kHz, THD = 10%)
- Low Popping Noise at Power ON
- Small Quiescent Current
  : I_{CCQ} = 21 mA (Typ.) (V_{CC} = 15 V, V_{in} = 0)
- Soft Clip
- Built-in Thermal Shut Down Protection Circuit
- Best for Supply Voltage 9 V, 12 V
- Operation Supply Voltage Range : $V_{CC(opr)}$ = 6~15 V (Ta = 25°C)

980910EBA2

- TOSHIBA is continually working to improve the quality and the reliability of its products. Nevertheless, semiconductor devices in general can malfunction or fail due to their inherent electrical sensitivity and vulnerability to physical stress. It is the responsibility of the buyer, when utilizing TOSHIBA products, to observe standards of safety, and to avoid situations in which a malfunction or failure of a TOSHIBA product could cause loss of human life, bodily injury or damage to property. In developing your designs, please ensure that TOSHIBA products are used within specified operating ranges as set forth in the most recent products specifications. Also, please keep in mind the precautions and conditions set forth in the TOSHIBA Semiconductor Reliability Handbook.
- The products described in this document are subject to the foreign exchange and foreign trade laws.
- The information contained herein is presented only as a guide for the applications of our products. No responsibility is assumed by TOSHIBA CORPORATION for any infringements of intellectual property or other rights of the third parties which may result from its use. No license is granted by implication or otherwise under any intellectual property or other rights of TOSHIBA CORPORATION or others.
- The information contained herein is subject to change without notice.

BLOCK DIAGRAM

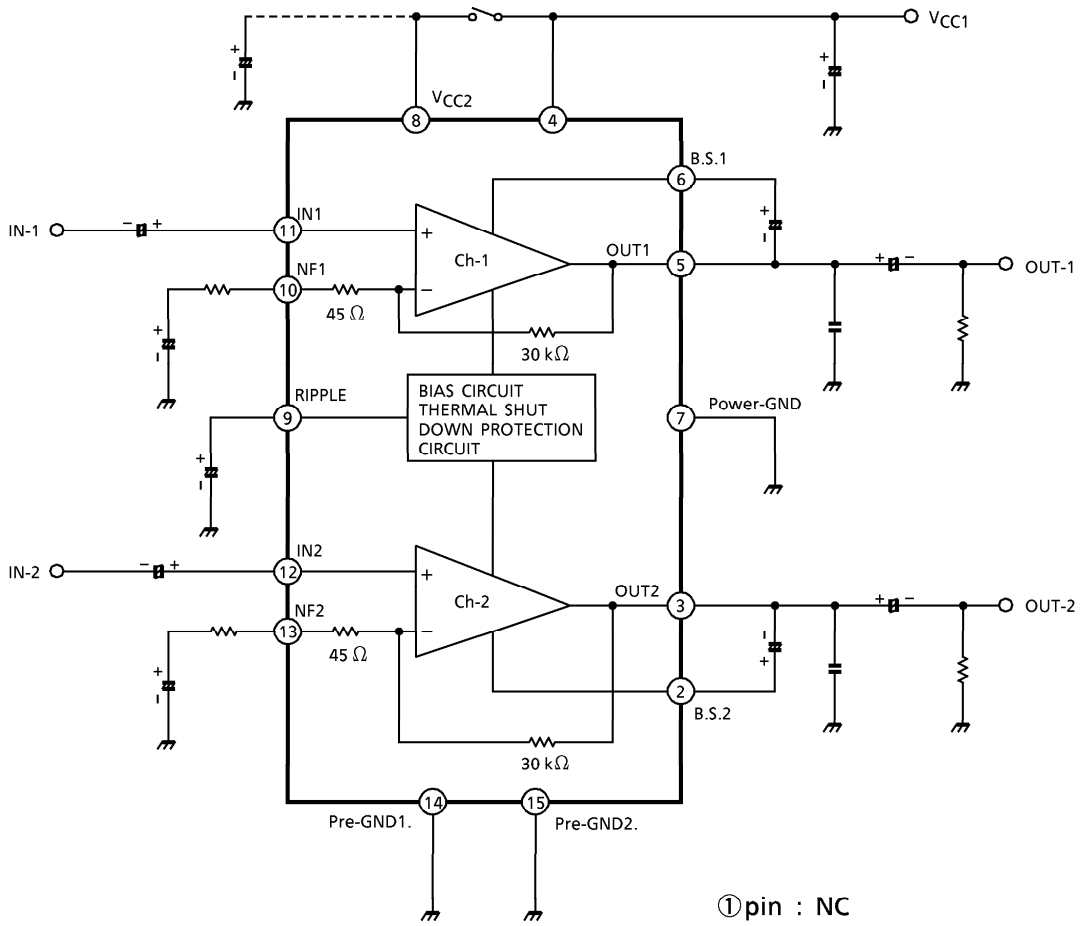

APPLICATION INFORMATION AND APPLICATION METHOD

1. Adjustment of voltage gain

The voltage gain G_V is obtained as follows by R1, R2 and R_f in Fig.1.

$$G_V = 20\,\ell og\,\frac{R_f + R1 + R2}{R_f + R1}$$

When $R_f = 0\,\Omega$, $G_V = 56.5$ dB (Typ.)
When $R_f = 120\,\Omega$, $G_V = 45$ dB (Typ.)

By increasing R_f, reduction of G_V is possible. However, since the feedback increase is liable to produce oscillation, it is recommended to use this at 40dB or over.

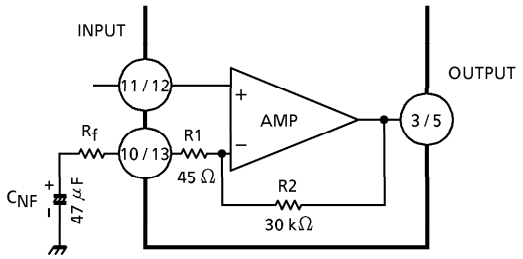

〔Fig.1〕

2. Thermal shut-down circuit

The thermal shut-down circuit is built in for the purpose of preventing the destruction of IC due to the abnormal temperature rise when the heat radiation is insufficient.
The operation temperature is set at radiation Fin temperature 175°C (Typ.). At this temperature or over the bias is interrupted to prevent the destruction of IC.

3. Input stage

The input circuit of this IC is as shown in Fig.2.
PNP Tr : Q1 is provided in the input circuit so as to make its usage possible without the input coupling capacitor. However, at pin⑪ and ⑫, max 60 mV offset voltage is produced.
Application after checking volume slide noise is recommended.
For cutting the volume slide noise, insert the input capacitor : C_{IN} in series to interrupt the DC component.

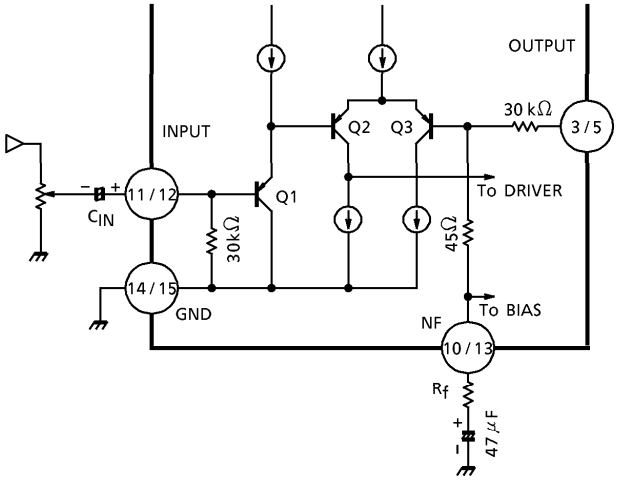

〔Fig.2〕

4. Oscillation preventive measures

For oscillation preventive capacitor C6 and C7 between the output terminal and GND, it is recommended to use polyester film capacitor having good characteristics for temperature and for high frequency.
Since the characteristics of the capacitor is liable to be influenced by the temperature, use this capacitor after the temperature test to check the oscillation allowance.
In addition, as the position of the electrolytic capacitor has a remarkable influence on the oscillation, connect C10 to V_{CC} at the nearest possible position from power GND.
At using this application with the voltage gain reduced, oscillation is liable to be produced. Apply the capacitor after checking enough for its capacity, type and mounting position.

(*) As the oscillation allowance varies according to the printed pattern layout, the standard printed board of TOSHIBA is recommended to be referred to design it.

5. Power ON / OFF switch

There is power ON / OFF switch at ⑧pin. However, output power is changed by ⑧pin supply voltage when ⑧pin supply voltage is not same ④pin supply voltage, after referring to attached date, select ⑧pin supply voltage.

6. Input voltage

When the excessive signal is input, turning-up is produced in the clip waveform.
The turning-up point is V_{in} = 300 mV_{rms} (Typ.) : V_{CC} = 9 V, R_L = 4 Ω, f = 1 kHz : Enough care must be taken for this phenomenon.

MAXIMUM RATINGS (Ta = 25°C)

CHARACTERISTIC	SYMBOL	RATING	UNIT
Supply Voltage	V_{CC}	20	V
Output Current (Peak / CH)	$I_{O\,(peak)}$	2.5	A
Power Dissipation	P_D (Note)	15.0	W
Operating Temperature	T_{opr}	−20~75	°C
Storage Temperature	T_{stg}	−55~150	°C

(Note) Derated above Ta = 25°C in the proportion of 120 mW / °C.

ELECTRICAL CHARACTERISTICS
(Unless otherwise specified, V_{CC} = 9 V, R_L = 4 Ω, R_g = 600 Ω, f = 1 kHz, Ta = 25°C, R_f = 120 Ω)

CHARACTERISTIC	SYMBOL	TEST CIR-CUIT	TEST CONDITION	MIN.	TYP.	MAX.	UNIT
Quiescent Current	I_{CCQ}	—	V_{in} = 0	—	21	45	mA
Output Power	P_{out} (1)	—	THD = 10%	2.0	2.5	—	W
	P_{out} (2)	—	THD = 10%, V_{CC} = 12 V	—	4.6	—	
Total Harmonic Distortion	THD	—	P_{out} = 0.4 W / ch	—	0.2	1.0	%
Voltage Gain	G_v (1)	—	R_f = 120 Ω, V_{out} = 0.775 V_{rms} (0 dBm)	43	45	47	dB
	G_v (2)	—	R_f = 0, V_{out} = 0.775 V_{rms} (0 dBm)	—	56.5	—	
Input Resistance	R_{IN}	—		—	30	—	kΩ
Output Noise Voltage	V_{no}	—	R_g = 10 kΩ, BW = 20 Hz~20 kHz	—	0.3	1.0	mV_{rms}
Ripple Rejection Ratio	R.R.	—	R_g = 600 Ω, f_{ripple} = 100 kHz	—	− 52	—	dB
Cross Talk	C.T.	—	R_g = 600 Ω, amp1 ↔ 2 V_{out} = 0.775 V_{rms} (0 dBm)	—	− 50	—	dB
Input Offset Voltage	V_{11}, V_{12}	—	—	—	30	60	mV
Stand-by Current	I_{OFF}	—	SW1 → OFF	—	1	—	μA

TEST CIRCUIT

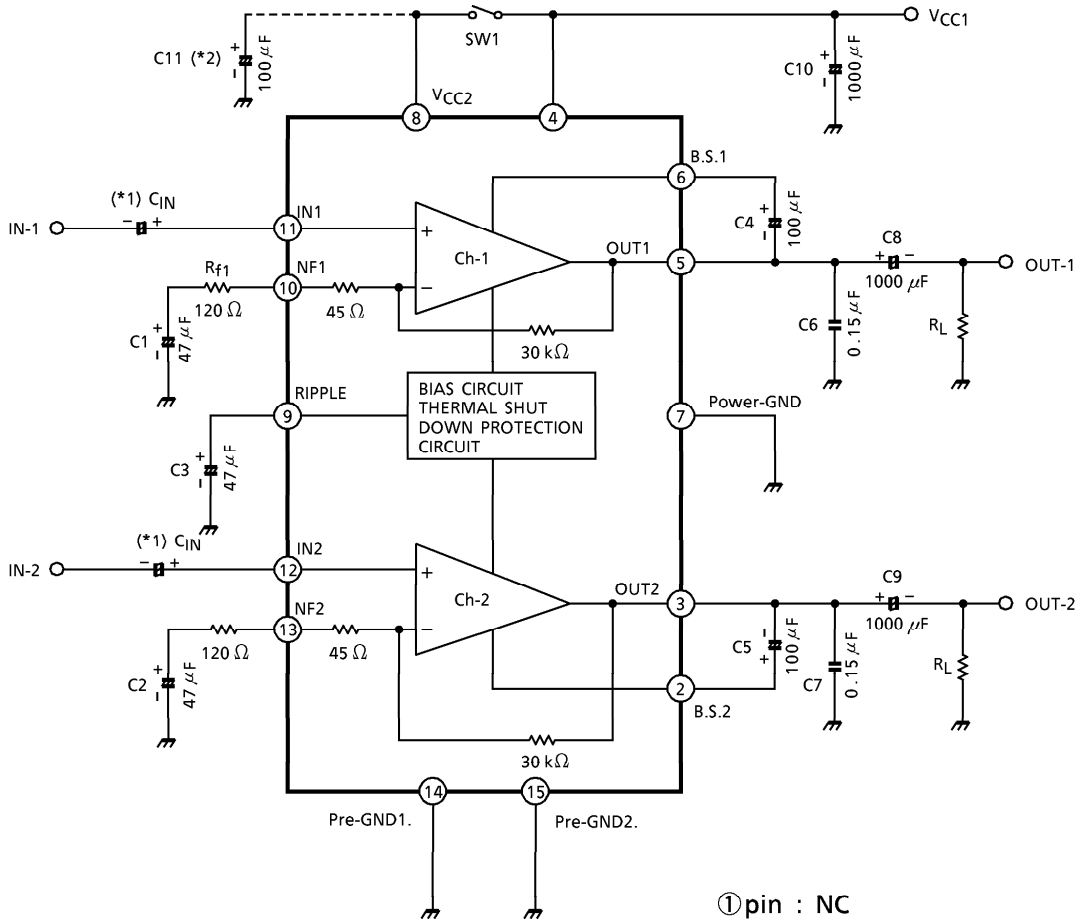

(*1) This IC can be used without coupling capacitor (C_{IN}).
If volume slide noise occurred by input offset voltage is undesirable, it needs to use the capacitor (C_{IN}).

(*2) The condenser between the ⑧pin and the GND (C11) is for reducing POP noise when the power ON / OFF switch (SW1) is set to ON / OFF.

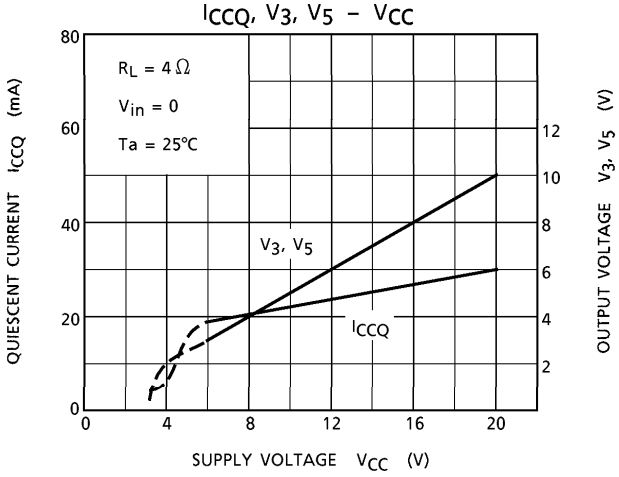
ICCQ, V3, V5 – VCC
RL = 4 Ω
Vin = 0
Ta = 25°C
V3, V5
ICCQ
QUIESCENT CURRENT ICCQ (mA)
OUTPUT VOLTAGE V3, V5 (V)
SUPPLY VOLTAGE VCC (V)
0
20
40
60
80
2
4
6
8
10
12
0
4
8
12
16
20

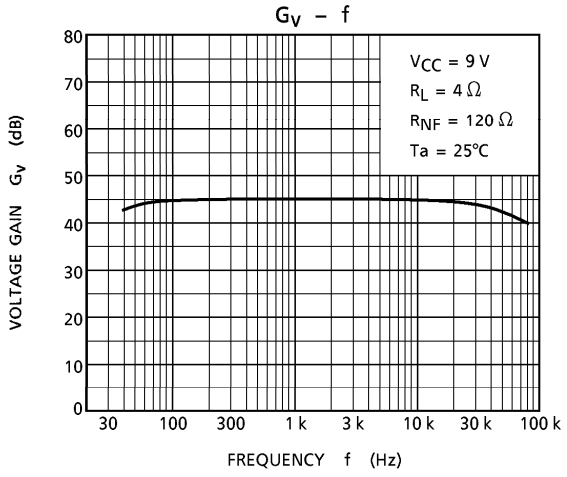
GV – f
VCC = 9 V
RL = 4 Ω
RNF = 120 Ω
Ta = 25°C
VOLTAGE GAIN GV (dB)
FREQUENCY f (Hz)
0
10
20
30
40
50
60
70
80
30
100
300
1 k
3 k
10 k
30 k
100 k

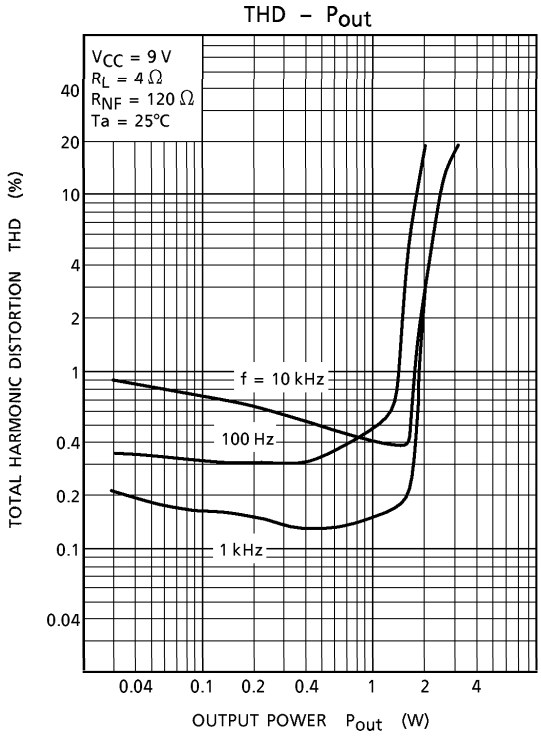
THD – Pout
VCC = 9 V
RL = 4 Ω
RNF = 120 Ω
Ta = 25°C
f = 10 kHz
100 Hz
1 kHz
TOTAL HARMONIC DISTORTION THD (%)
OUTPUT POWER Pout (W)
0.04
0.1
0.2
0.4
1
2
4
10
20
40
0.04
0.1
0.2
0.4
1
2
4

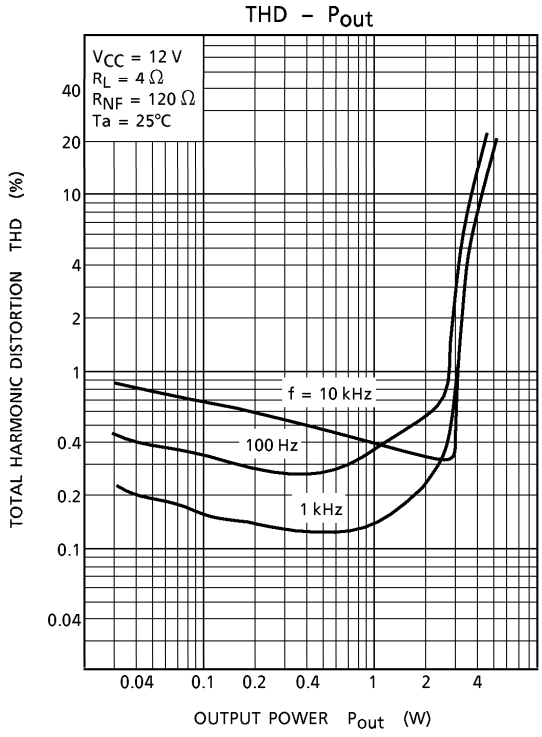
THD – Pout
VCC = 12 V
RL = 4 Ω
RNF = 120 Ω
Ta = 25°C
f = 10 kHz
100 Hz
1 kHz
TOTAL HARMONIC DISTORTION THD (%)
OUTPUT POWER Pout (W)
0.04
0.1
0.2
0.4
1
2
4
10
20
40
0.04
0.1
0.2
0.4
1
2
4

THD – P_{out}

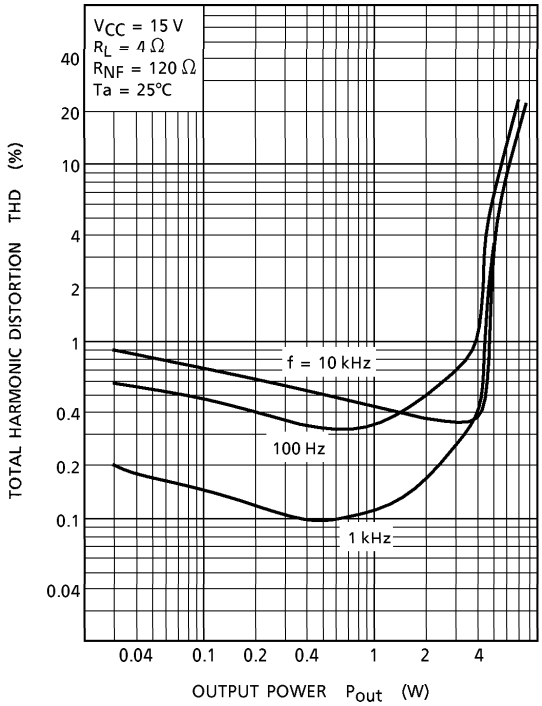

THD – P_{out}

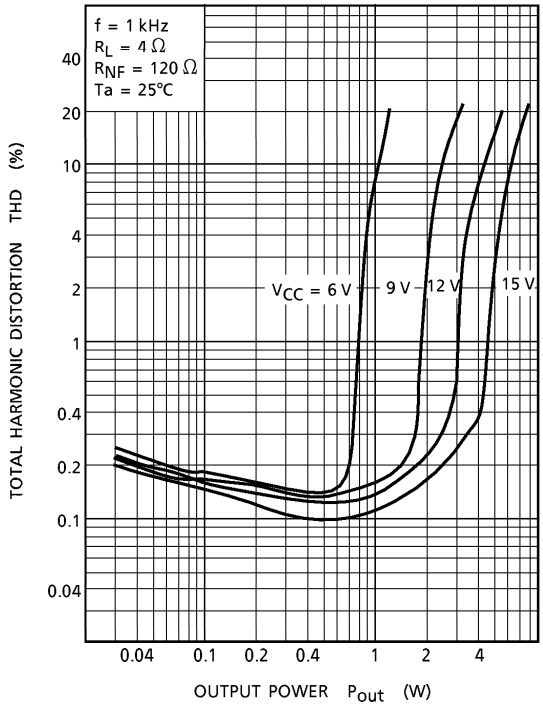

R.R. – f

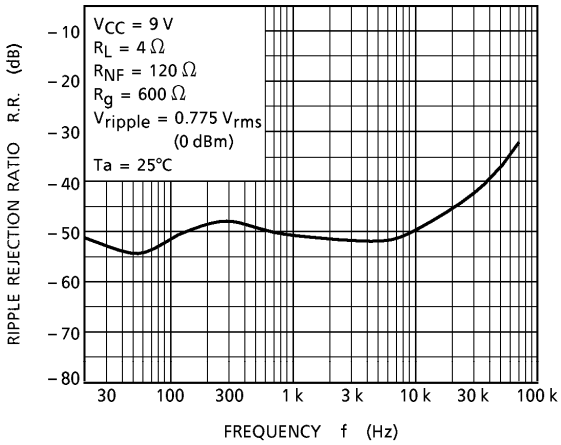

R.R. – R_g

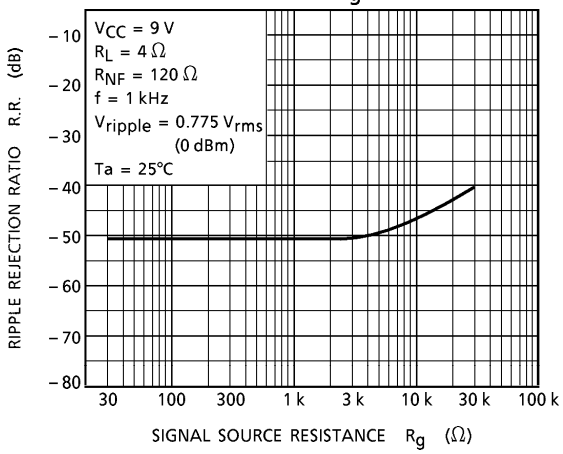

C.T. – f

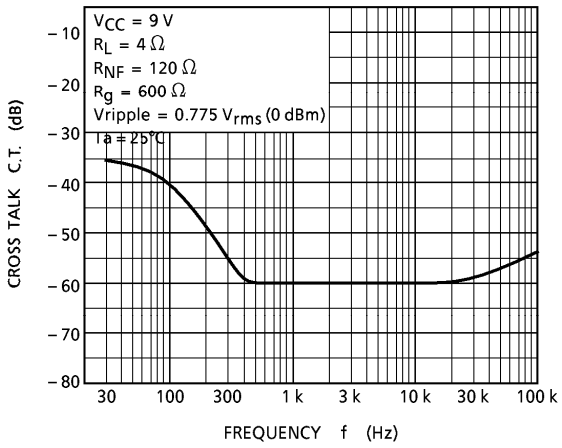

C.T. – Rg

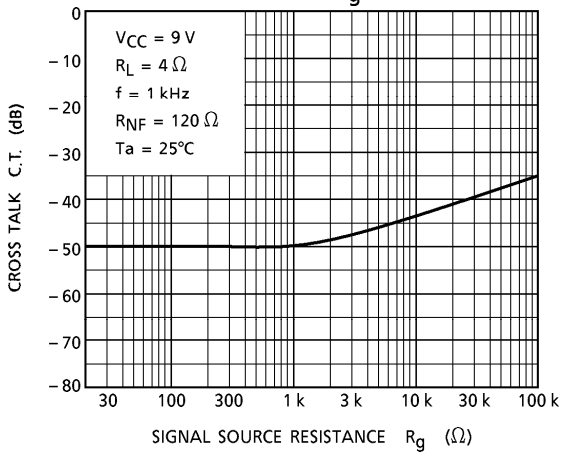

Vno – Rg

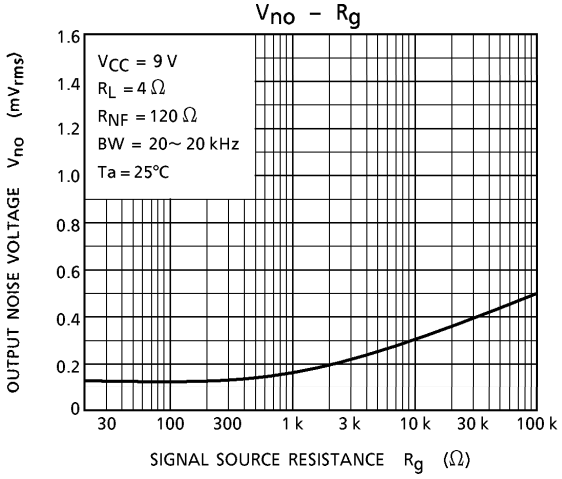

ICCQ2, V2, V10 – VCC2

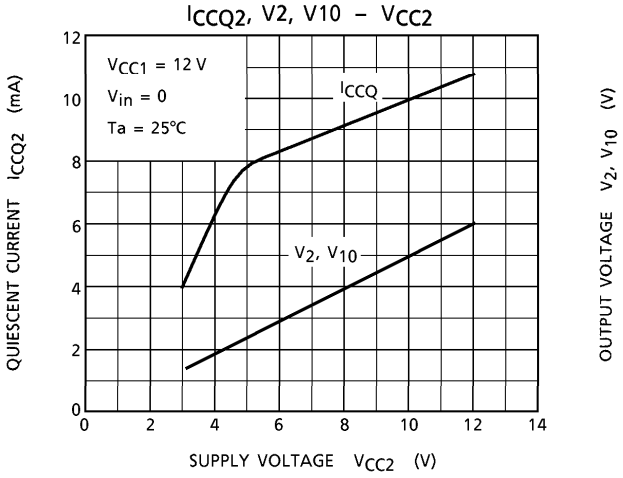

THD – Pout

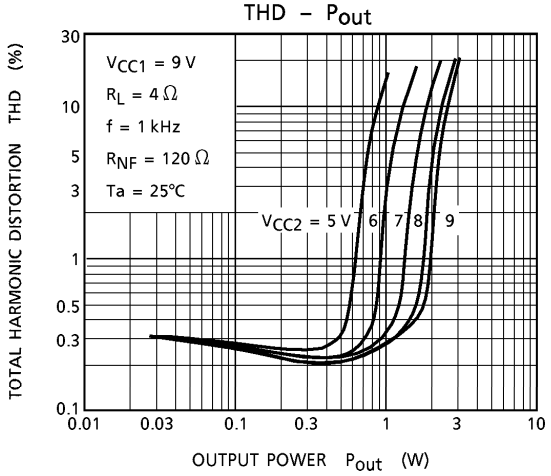

THD – Ta

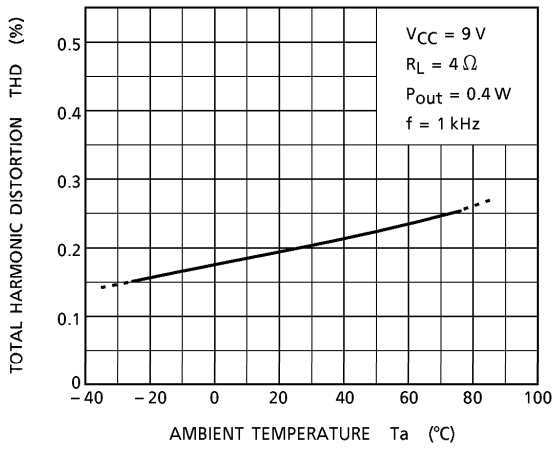

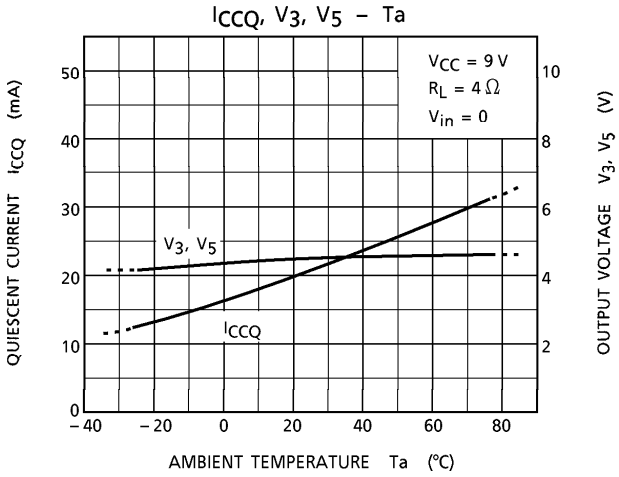
ICCQ, V3, V5 – Ta
VCC = 9 V
RL = 4 Ω
Vin = 0
V3, V5
ICCQ
QUIESCENT CURRENT ICCQ (mA)
OUTPUT VOLTAGE V3, V5 (V)
AMBIENT TEMPERATURE Ta (°C)

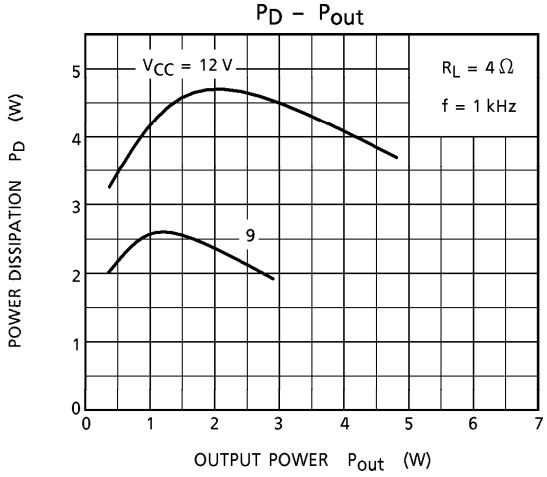
PD – Pout
VCC = 12 V
RL = 4 Ω
f = 1 kHz
9
POWER DISSIPATION PD (W)
OUTPUT POWER Pout (W)

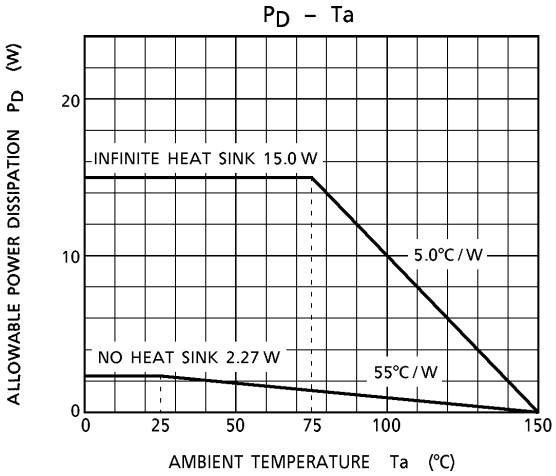
PD – Ta
INFINITE HEAT SINK 15.0 W
5.0°C / W
NO HEAT SINK 2.27 W
55°C / W
ALLOWABLE POWER DISSIPATION PD (W)
AMBIENT TEMPERATURE Ta (°C)

OUTLINE DRAWING

HSIP15-P-2.00A

Unit : mm

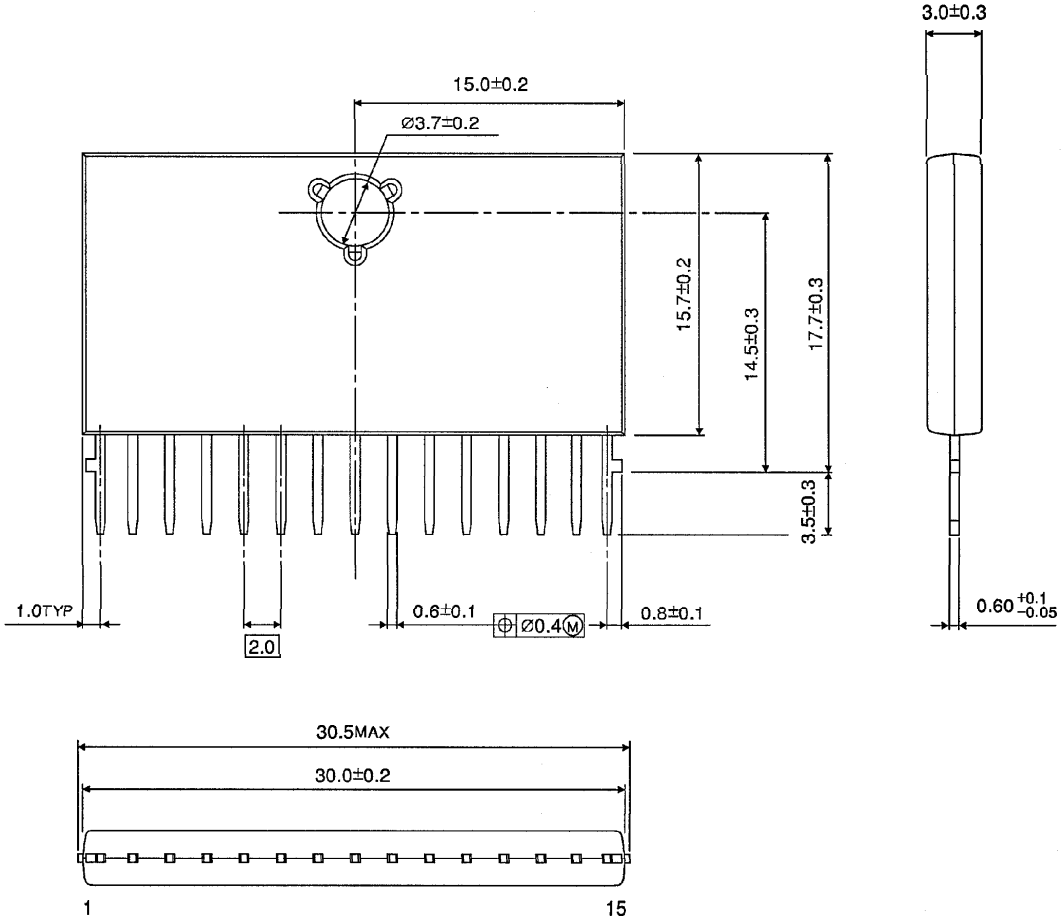

Weight : 3.9 g (Typ.)