VISHAY
VISHAY RESISTORS

VISHAY 1280 AND 1285G SERIES
Precision Trimming Potentiometers
3/4" Rectilinear, ±5 ppm/°C and ±15 ppm/°C TCR

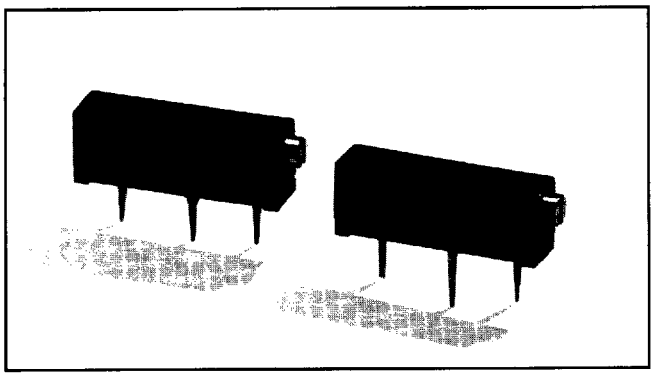

FEATURES

- Temperature Coefficient of Resistance (TCR): <15 ppm/°C (Model 1280G); <5 ppm/°C (Model 1285G)[4] (–55°C to +125°C Ref. @ +25°C); through the wiper ±50 ppm/°C
- Load Life Stability: 0.5% Maximum ΔR under Full Rated Power @ +25°C for 2,000 hours
- Settability: 0.05% Typical; 0.1% Maximum
- Setting Stability: 0.1% Typical; 0.5% Maximum, ΔSS
- Power Rating: 0.75 watts @ +25°C
- Resistance Range: 10 Ω to 20K Ω
- Resistance Tolerance: ±10%, ±5 %
- Backlash: < 0.05%
- Tap Test: 0.05% Typical; 0.1% Maximum

TABLE 1 - 1280G AND 1285G SERIES

ELECTRICAL SPECIFICATIONS	
Resistance Tolerance	Model 1280G 10%[1] Model 1285G 5%
Resistance Range	10 Ω to 20K Ω
T.C.R. Model 1280G	+15 ppm/°C (–55°C to +25°C) –15 ppm/°C (+25°C to +125°C)
T.C.R. Model 1285G [4]	+5 ppm/°C (–55°C to +25°C) –5 ppm/°C (+25°C to +125°C)
Power	0.75 W @ +25°C derated linearly to zero watts @ +125°C (See Fig, 2)
Settability	0.05% Typical[2]; 0.1% Maximum
Setting Stability	0.1% Typical; 0.5% Maximum, ΔSS
Roll-on, Roll-off	0.25% Typical; 1.0% Maximum
Load-Life Stability	0.5% ΔR after 2,000 hours under Full Rated Power @ +25°C
End Resistance	2 Ω Maximum
C.R.V.[3]	3 Ω Typical; 10 Ω Maximum
Frequency Characteristics	10 ns rise time @ 1K Ω to 100 MHz

TABLE 2 - 1280G AND 1285G SERIES

MECHANICAL SPECIFICATIONS	
Adjustment Turns	26 ±2 turns
Backlash	<0.05%
Stops	clutch, wiper idles
Sealed	+85°C water immersion
Torque	5 oz. in. Max.
Weight	1.5 grams Max.
Construction	
Case Material	Valox®
Lead Screw	Brass
Wiper	Precious Metal Brush
Rider Block	Nylon
Element	Bulk Metal® Foil
Lead Material	Gold Plated Phosphor Bronze

TABLE 3 - STANDARD VALUES

10 Ω, 20 Ω, 50 Ω, 100 Ω, 200 Ω, 500 Ω
1K, 2K, 5K, 10K, 20K

NOTES

1. 5% Available on Special Order.
2. Typical is a designer's reference which represents that 85% of the units supplied over a long period of time, will be at least the figure shown or better.
3. The 1280G can be screened for low noise, if required.
4. For model 1285G 10 Ω and 20 Ω TCR is ±10 ppm/°C
5. Panel mount available on special order.

HOW TO ORDER 1280/1285 SERIES PARTS:

Please specify Vishay Model 1202 Precision Trimming Potentiometers as follows:

Example:

1280G	100R	10%
Model No.	Resistance Value	Tolerance

VISHAY RESISTORS, 63 Lincoln Highway, Malvern, PA 19355 - 2120 • Phone (610) 644-1300
App. Eng. Phone (610) 251-5289 • App. Eng, Fax (610) 640-4487 • Sales Phone (610) 251-5842 • Sales Fax (610) 640-9081

VISHAY 1280 AND 1285G SERIES
Schematic and Dimensions

FIGURE 1 - 1280G / 1285G SCHEMATIC AND DIMENSIONS [5]

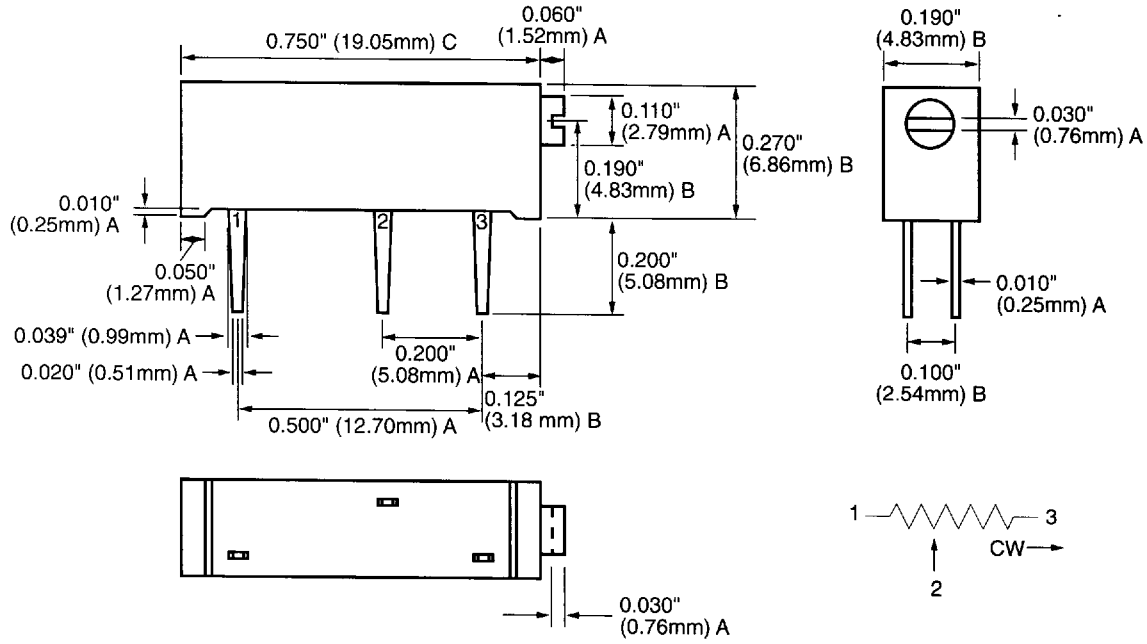

TOLERANCES

A = ±0.005" (0.13mm)
B = ±0.010" (0.25mm)
C = ±0.015" (0.38mm)
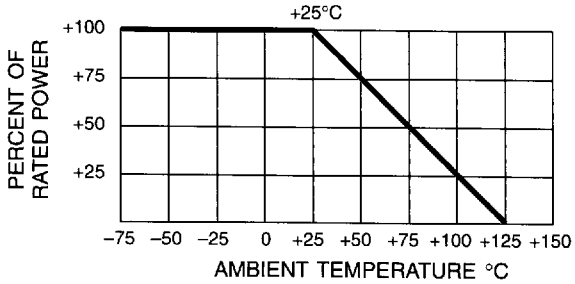
FIGURE 2 - POWER DERATING CURVE