2.50mm (0.098") PITCH CONNECTOR

DIP type

Wire-to-Board Wafer	YEAW250 Series
	DIP
	Right Angle

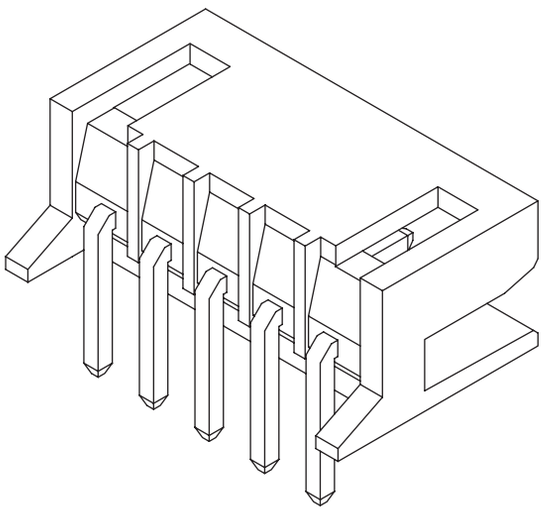

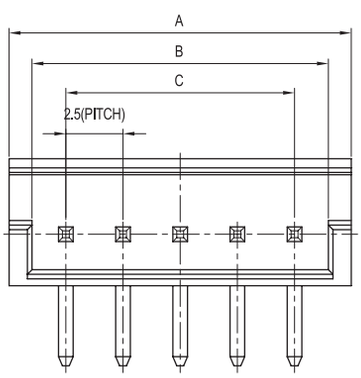

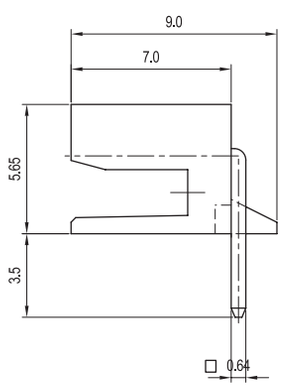

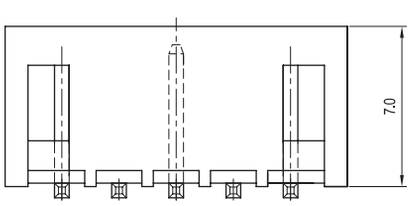

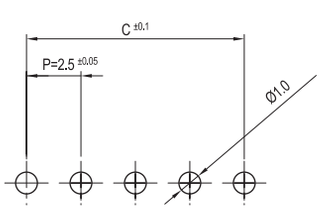

PCB LAYOUT

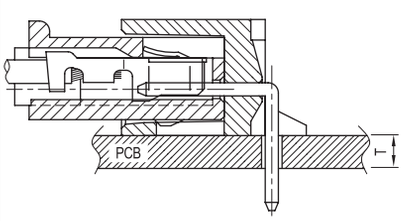

PCB ASS'Y

Material

I/NO	DESCRIPTION	TITLE	MATERIAL
1	WAFER	YEAW250	PA66, UL94 V Grade
2	PIN		Brass & Tin-Plated

Available Pin

PARTS NO.	DIM. A	DIM. B	DIM. C
YEAW250-02P	7.45	5.50	2.50
YEAW250-03P	9.95	8.00	5.00
YEAW250-04P	12.45	10.50	7.50
YEAW250-05P	14.95	13.00	10.00
YEAW250-06P	17.45	15.50	12.50
YEAW250-07P	19.95	18.00	15.00
YEAW250-08P	22.45	20.50	17.50
YEAW250-09P	24.95	23.00	20.00
YEAW250-10P	27.45	25.50	22.50
YEAW250-11P	29.95	28.00	25.00
YEAW250-12P	32.45	30.50	27.50

Specification

ITEM	SPEC
Voltage Rating	AC/DC 250V
Current Rating	AC/DC 3A
Operating Temperature	-25℃~+85℃
Contact Resistance	30mΩ MAX
Withstanding Voltage	AC1000V/1min
Insulation Resistance	1000MΩ MIN
Applicable Wire	-
Applicable P.C.B	1.2~1.6mm
Applicable FPC/FFC	-
Solder Height	-
Crimp Tensile Strength	-
UL FILE NO	-