ZILOG

CUSTOMER PROCUREMENT SPECIFICATION

Z84C13/Z84C15

Z80® CMOS EIPC ENHANCED INTELLIGENT PERIPHERAL CONTROLLER

GENERAL DESCRIPTION

The Enhanced Intelligent Peripheral Controller (EIPC) is a series of highly superintegrated devices. The Z84C15 is a CMOS 8-bit microprocessor integrated with the CTC, SIO, CGC, WDT and the PIO into a single 100-pin Quad Flat Pack (QFP), or 100-pin Very Small Quad Flat Pack (VQFP) package. The Z84C13 is the Z84C15 without PIO, and is housed in a 84-pin PLCC package. These high-end superintegrated intelligent peripheral controllers are targeted for a broad range of applications ranging from error correcting modems to enhancement/cost reductions of existing hardware using Z80® MCU-based discrete peripherals.

Notes:
All Signals with a preceding front slash, "/", are active Low, e.g.: B//W (WORD is active Low); /B/W (BYTE is active Low, only).

Power connections follow conventional descriptions below:

Connection	Circuit	Device
Power	V_{CC}	V_{DD}
Ground	GND	V_{SS}

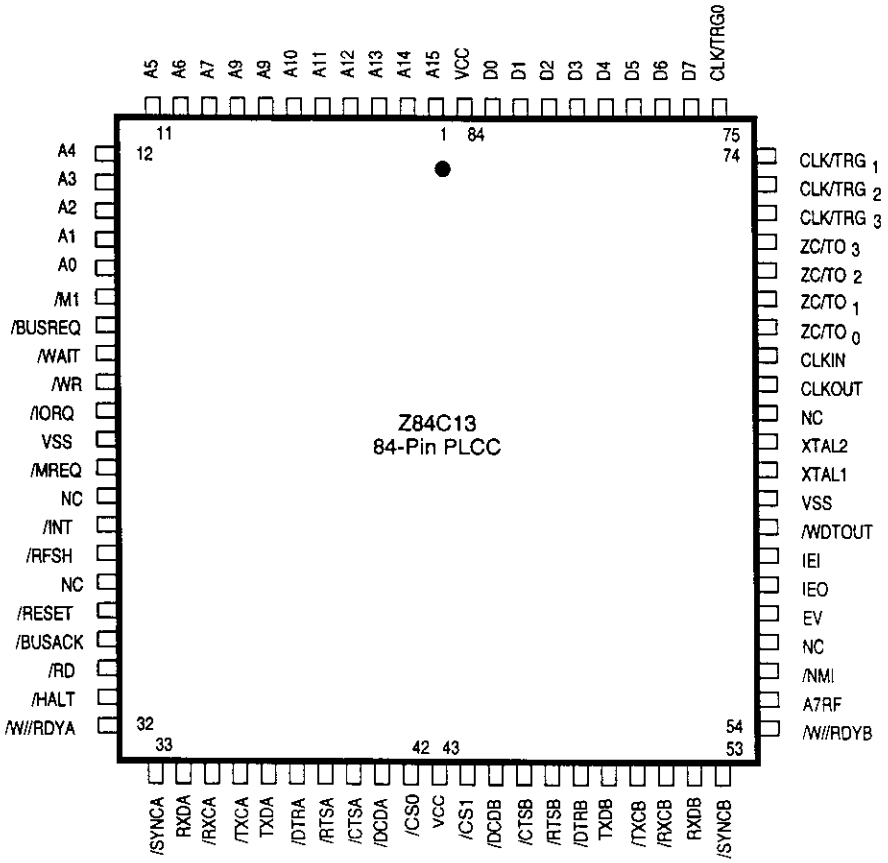

Z84C13 Pin Assignments

GENERAL DESCRIPTION (Continued)

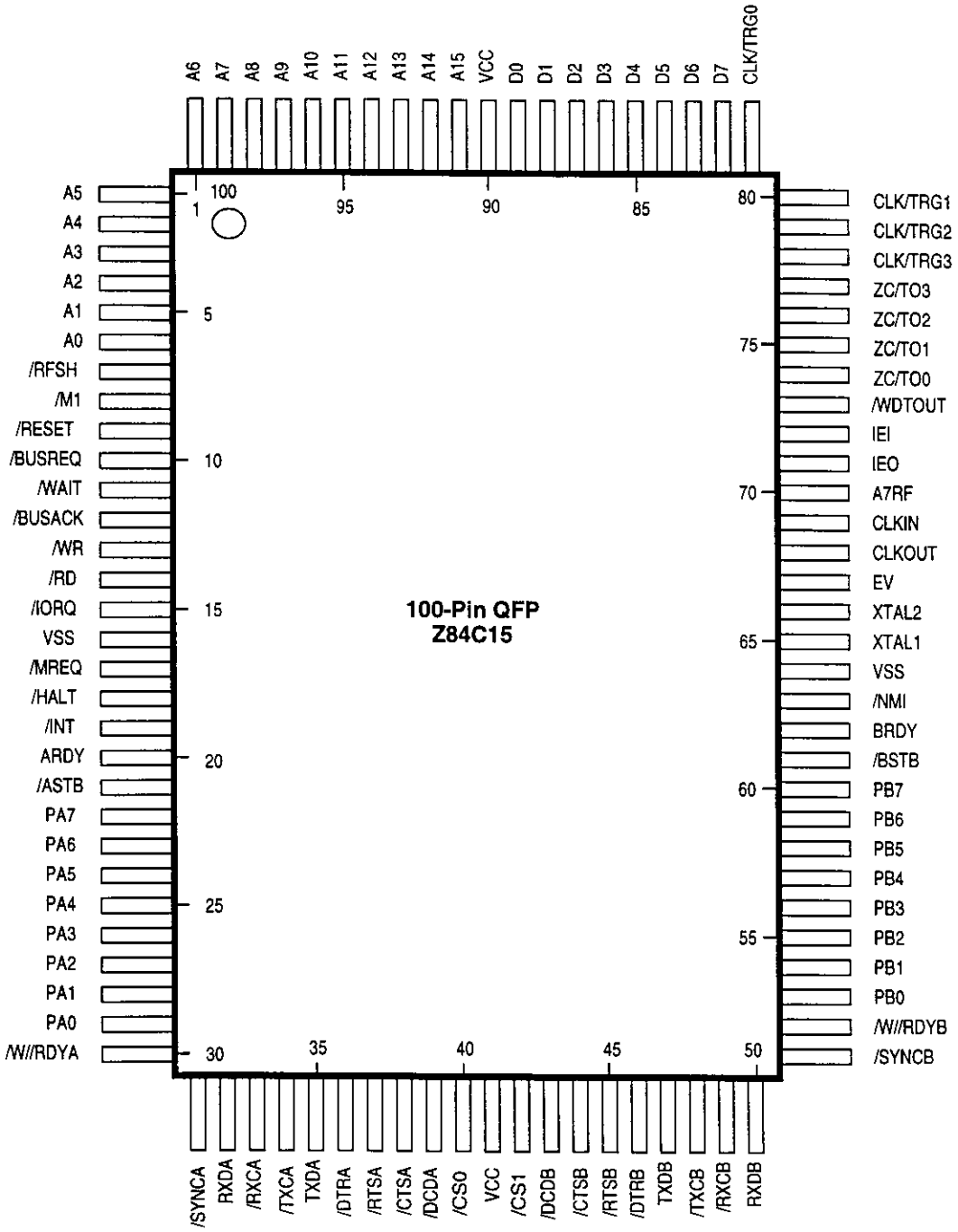

Z84C15 Pin Assignments

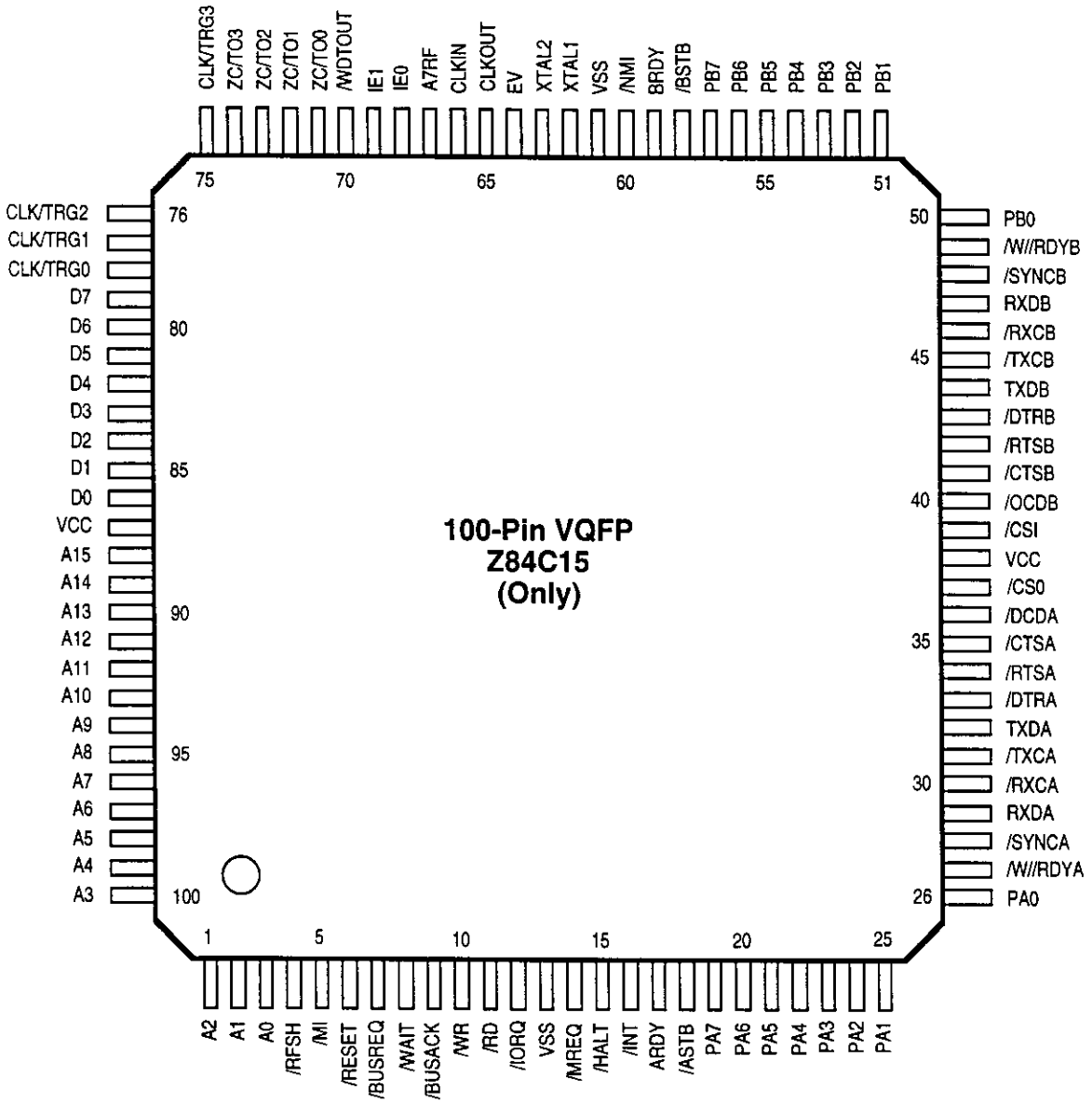

Z84C15 Pin Assignments

ABSOLUTE MAXIMUM RATINGS

Symbol	Description	Min	Max	Units
V_{CC}	Supply Voltage (*)	–0.3	+7.0	V
T_{STG}	Storage Temp	–65°	+150°	C
T_A	Oper Ambient Temp		†	C

Notes:
* Voltage on all pins with respect to GND.
† See Ordering Information.

Stresses greater than those listed under Absolute Maximum Ratings may cause permanent damage to the device. This is a stress rating only; operation of the device at any condition above those indicated in the operational sections of these specifications is not implied. Exposure to absolute maximum rating conditions for extended periods may affect device reliability.

STANDARD TEST CONDITIONS

The DC Characteristics and capacitance sections below apply for the following standard test conditions, unless otherwise noted. All voltages are referenced to GND (0V). Positive current flows into the referenced pin (Standard Test Load).

Available operating temperature ranges are:
S = 0°C to 70°C
E = –40°C to +100°C

Voltage Supply Range: $+4.50V \leq V_{CC} \leq +5.50V$

All AC parameters assume a load capacitance of 100 pF. Add 10 ns delay for each 50 pF increase in load up to a maximum of 150 pF for the data bus and 100 pF for address and control lines. AC timing measurements are referenced to 1.5 volts (except for clock, which is referenced to the 10% and 90% points). Maximum capacitive load for CLK is 125 pF.

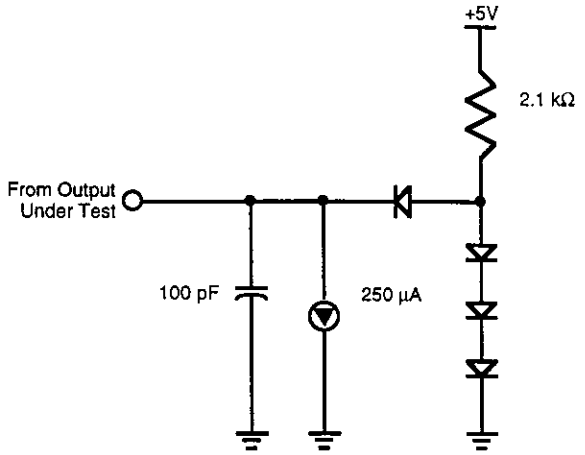

Standard Test Load

CAPACITANCE

Guaranteed by design and characterization

Symbol	Parameter	Min	Max	Unit
C_{CLOCK}	Clock Capacitance		35	pF
C_{IN}	Input Capacitance		5	pF
C_{OUT}	Output Capacitance		15	pF

DC CHARACTERISTICS

V_{CC} = 5.0V ± 10%, unless otherwise specified

Symbol	Parameter	Min	Max	Unit	Condition
V_{OHC}	Clock Output High Voltage	V_{CC}–0.6		V	–2.0 mA
V_{OLC}	Clock Output Low Voltage		0.4	V	+2.0 mA
V_{IHC}	Clock Input High Voltage	V_{CC}–0.6		V	
V_{ILC}	Clock Input Low Voltage		0.4	V	
V_{IH}	Input High Voltage	2.2	V_{CC}	V	
V_{IL}	Input Low Voltage	–0.3	0.8	V	
V_{OL}	Output Low Voltage		0.4 [5]	V	I_{LO}=2.0 mA
V_{OH1}	Output High Voltage	2.4		V	I_{OH}=–1.6 mA
V_{OH2}	Output High Voltage	V_{CC}–0.8 [5]		V	I_{OH}=–250 µA
I_{CC1}	Power Supply Current				V_{CC}=5V
	XTALIN = 16 MHz		TBD		
	XTALIN =10 MHz		50	mA	V_{IH}=V_{CC}–0.2V
	XTALIN = 6 MHz		30	mA	V_{IL}=0.2V
I_{CC2}	Power Supply Current (STOP Mode)		50	µA	V_{CC}=5V
I_{CC3}	Power Supply Current (IDLE1 Mode)				V_{CC}=5V
	XTALIN = 16 MHz		TBD		
	XTALIN =10 MHz		6	mA	V_{IH}=V_{CC}–0.2V
	XTALIN = 6 MHz		4	mA	V_{IL}=0.2V
I_{CC4}	Power Supply Current (IDLE2 Mode)				V_{CC}=5V
	XTALIN = 16 MHz		TBD		
	XTALIN =10 MHz		TBD [1]	mA	V_{IH}=V_{CC}–0.2V
	XTALIN = 6 MHz		TBD [1]	mA	V_{IL}=0.2V
I_{LI}	Input Leakage Current	–10	10 [4]	µA	V_{IN}=0.4V to V_{CC}
$I_{L(SY)}$	SYNC Pin Leakage Current	–40	10	µA	V_{OUT}=0.4V to V_{CC}
I_{LO}	Tri-state Output Leakage Current in Float	–10	10 [2]	µA	V_{OUT}=0.4V to V_{CC}
I_{OHD}	Darlington Drive Current				V_{OH}=1.5V
	(Port B and CTC ZC/TO)	–1.5		mA	REXT = 390 Ohms

Notes:

[1] Measurements made with outputs floating.
[2] A15-A0, D7-D0, /MREQ, /IORQ, /RD and /WR.
[3] I_{CC2} Standby current is guaranteed when the /HALT pin is Low in STOP mode.
[4] All pins except XTALI, where I_{LI} = ±25 µA.
[5] A15-A0, D7-D0, /MREQ, /IORQ, /RD, /WR, /HALT, /M1 and /BUSACK.

TIMING DIAGRAMS

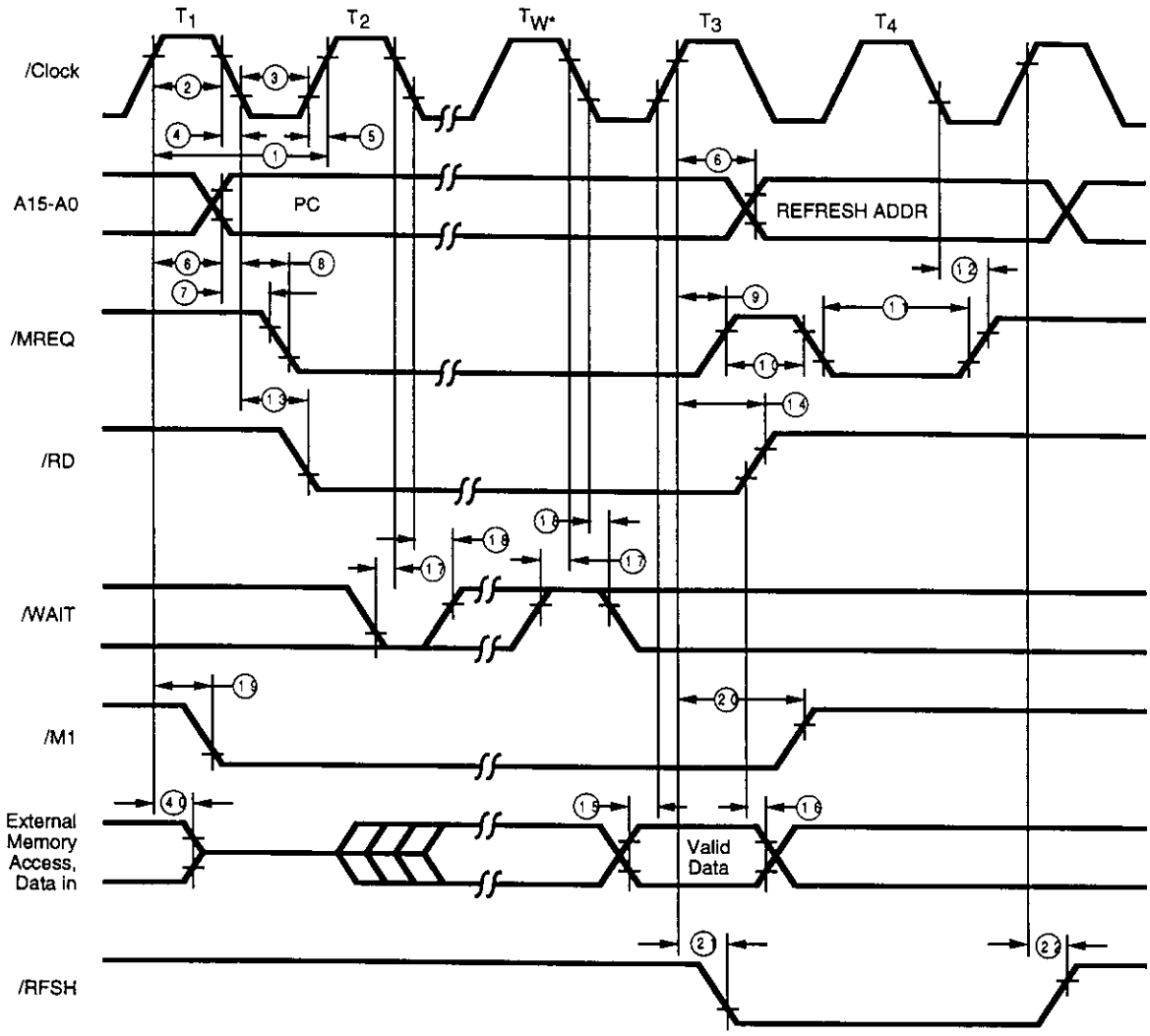

Instruction Opcode Fetch
(See Table A)

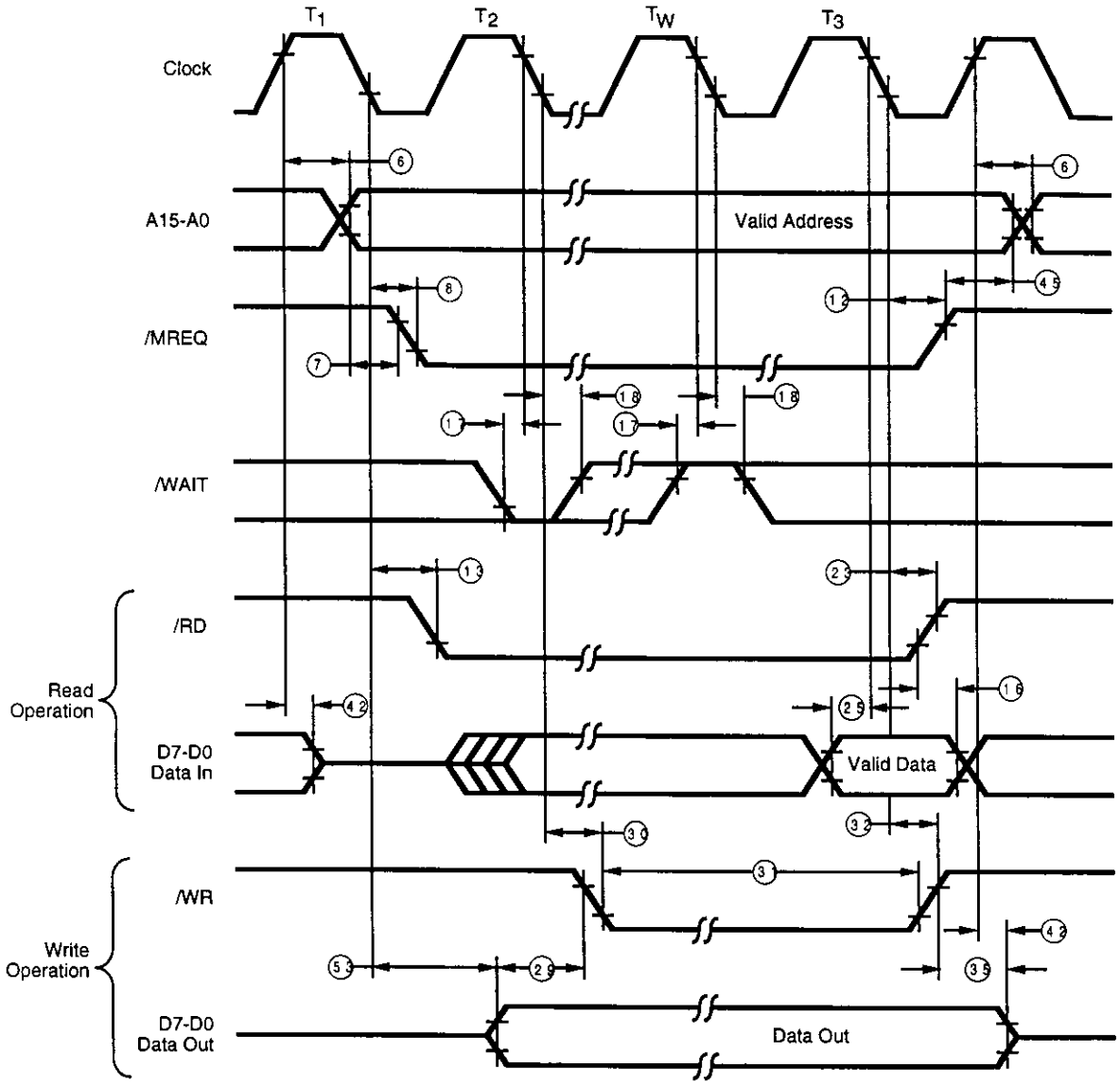

Memory Read or Write Cycle
(See Table A)

TIMING DIAGRAMS

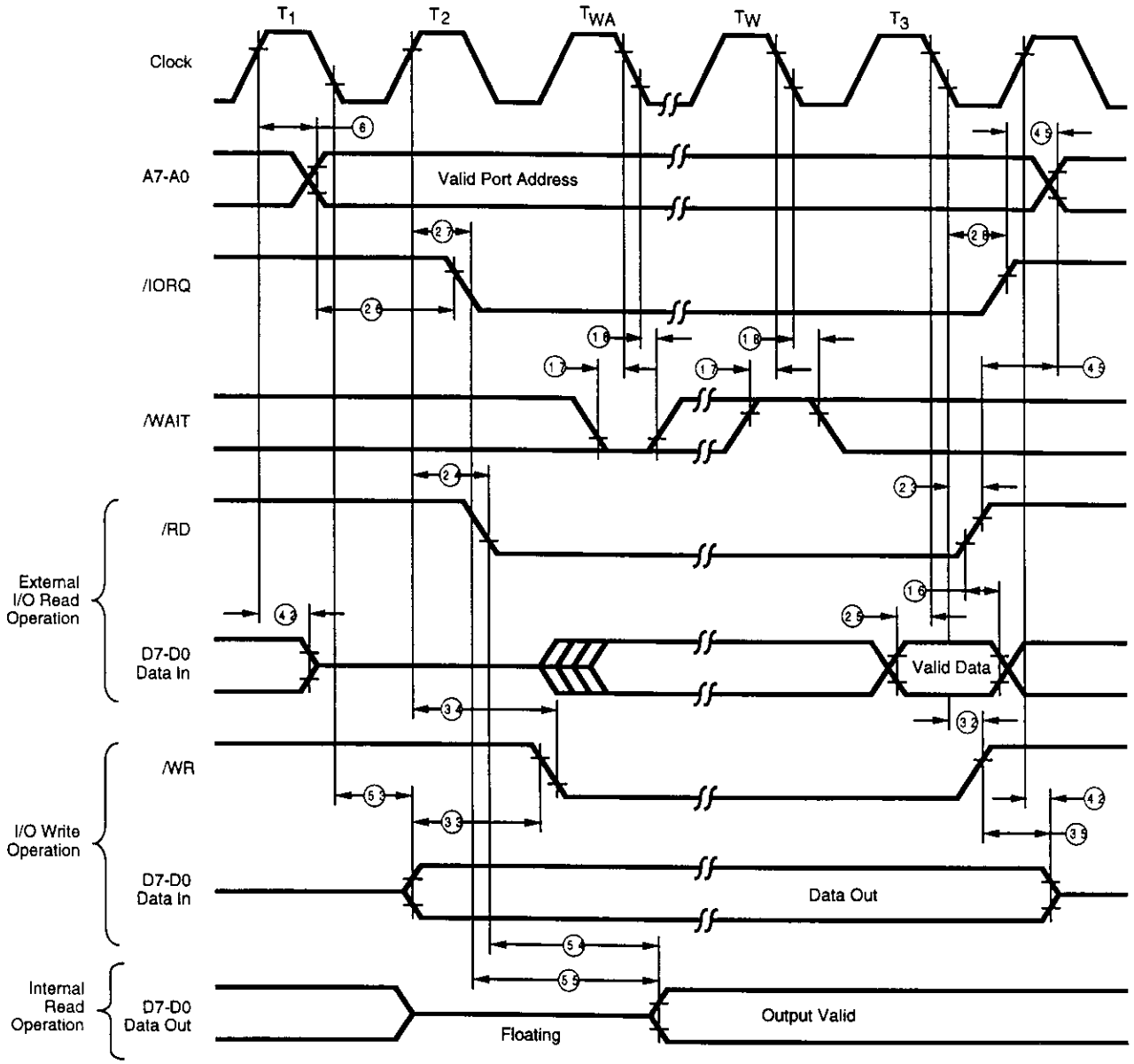

Note: T_{WA} = One wait cycle automatically inserted by CPU

Input or Output Cycle
(See Table A)

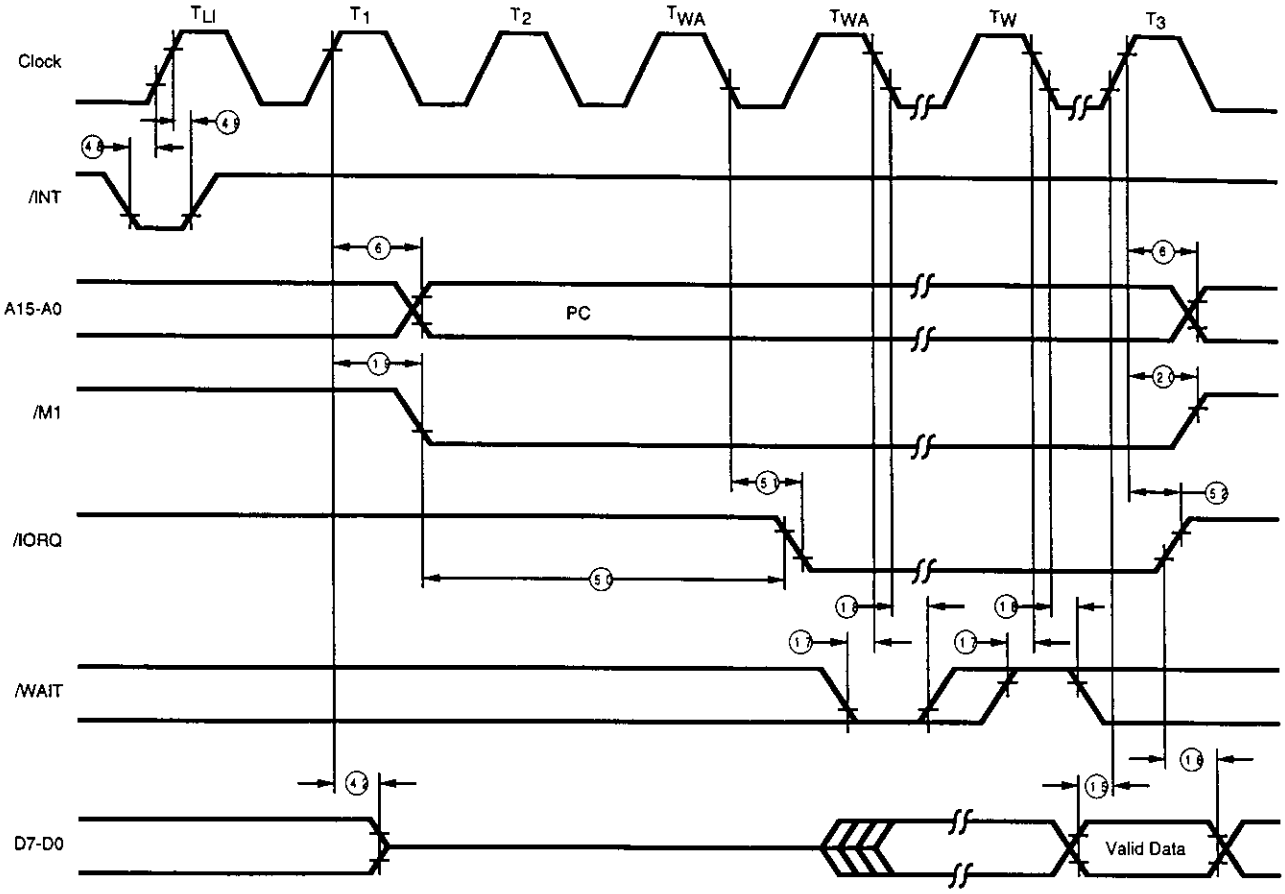

NOTE: 1) T_{LI} = Last state of any instruction cycle

2) T_{WA} = Wait cycle automatically inserted by CPU

Interrupt Request/Acknowledge Cycle
(See Table A)

TIMING DIAGRAMS

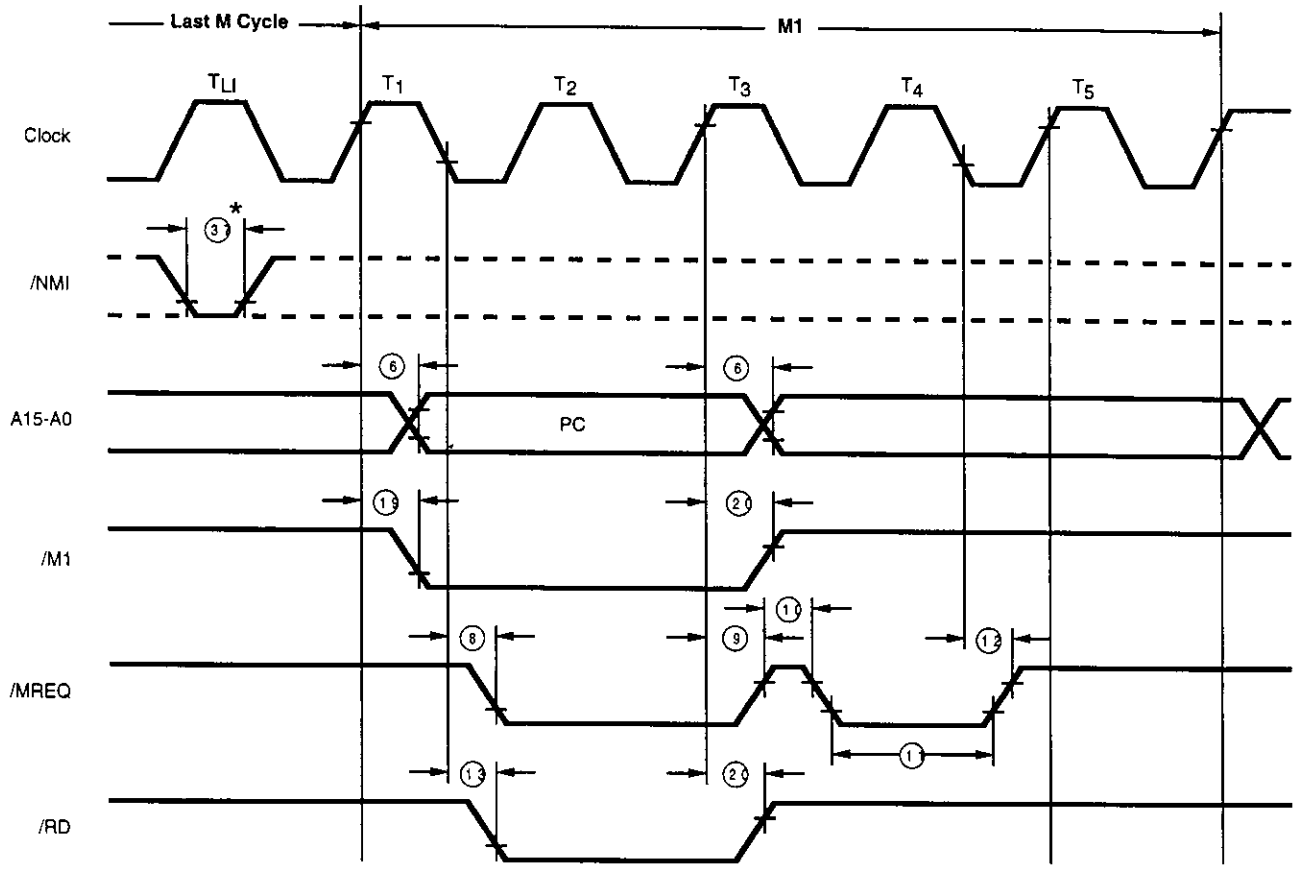

* Although /NMI is an asynchronous input, to guarantee its being recognized on the following machine cycle, /NMIs falling edge must occur no later than the rising edge of the clock cycle preceding the last state of any instruction cycle (T_{LI}).

Input or Output Cycle
(See Table A)

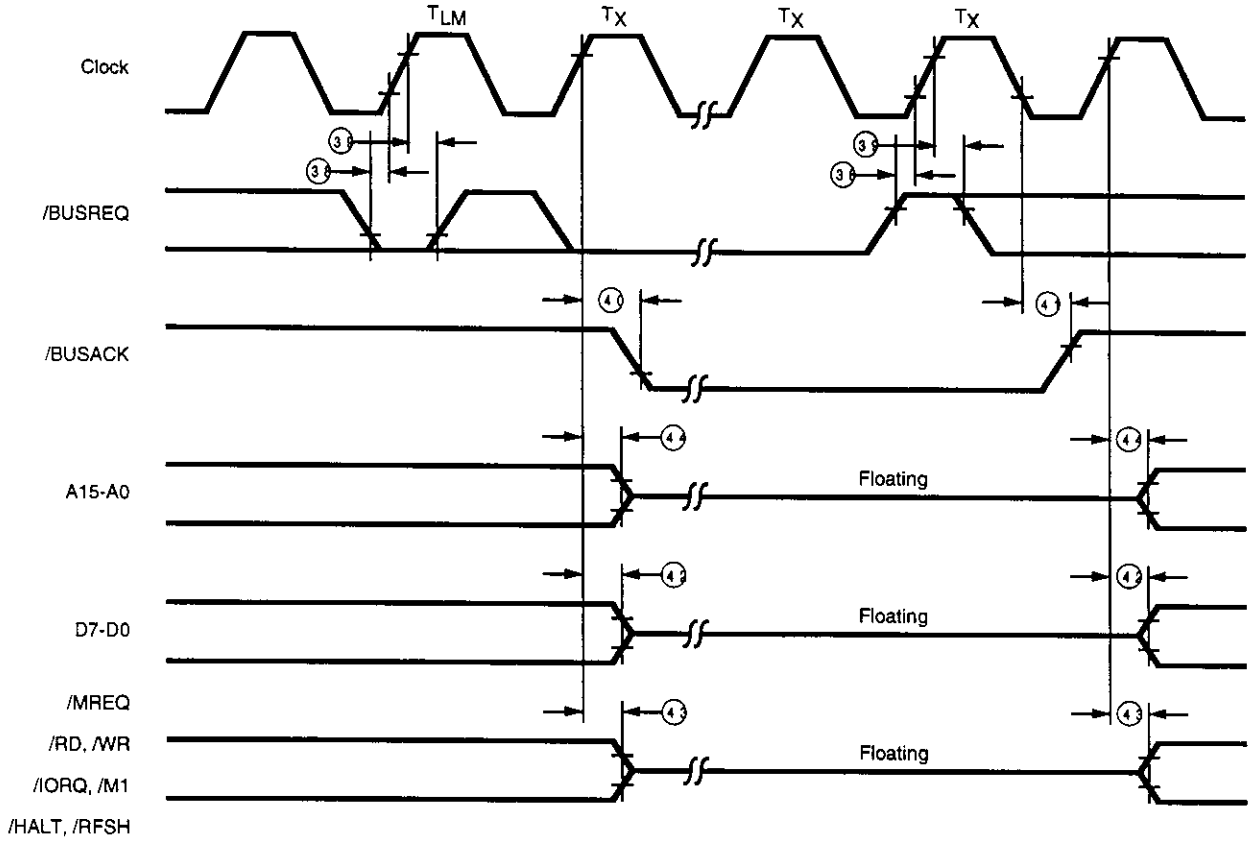

Notes: 1) T_{LM} = Last state of any M cycle

2) T_X = An arbitrary clock cycle used by requesting device

Interrupt Request/Acknowledge Cycle
(See Table A)

TIMING DIAGRAMS (Continued)

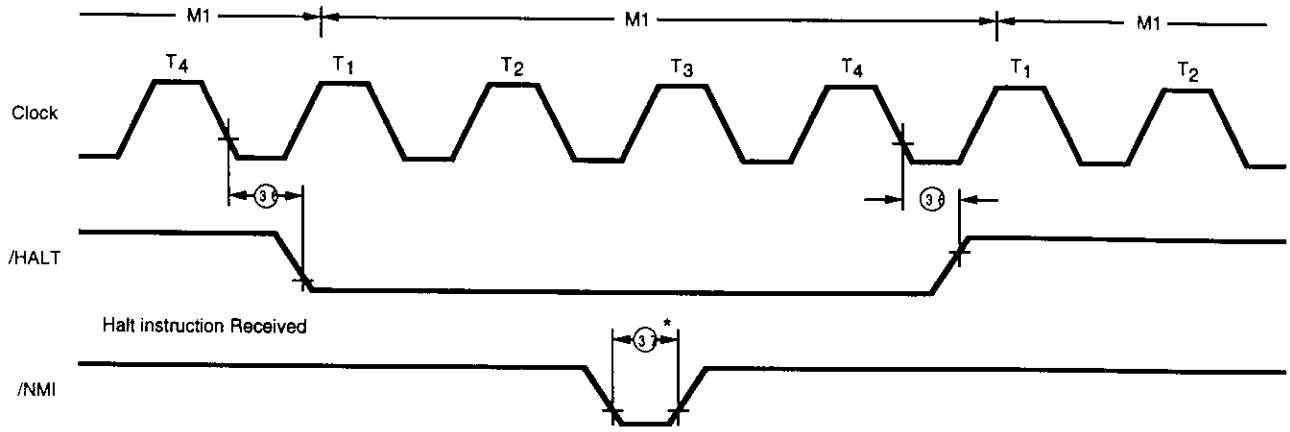

* Although /NMI is an asynchronous input, to guarantee its being recognized on the following machine cycle, /NMIs falling edge must occur no later than the rising edge of the clock preceding the last state of any instruction cycle (T_{LI}).

Halt Acknowledge
(See Table A)

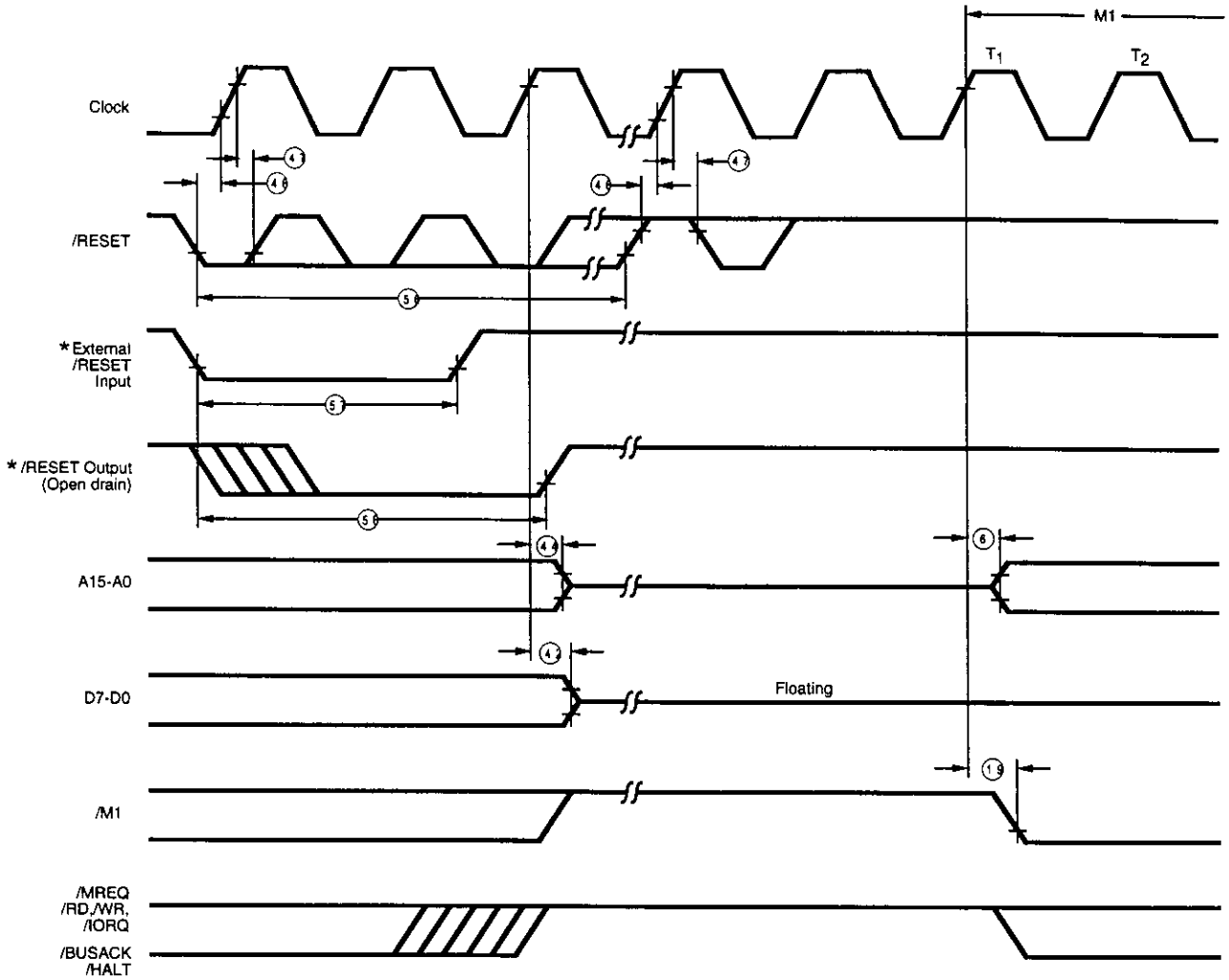

* 84C13/C15 Only Reset Output is Enabled

Reset Cycle
(See Table A)

TIMING DIAGRAMS (Continued)

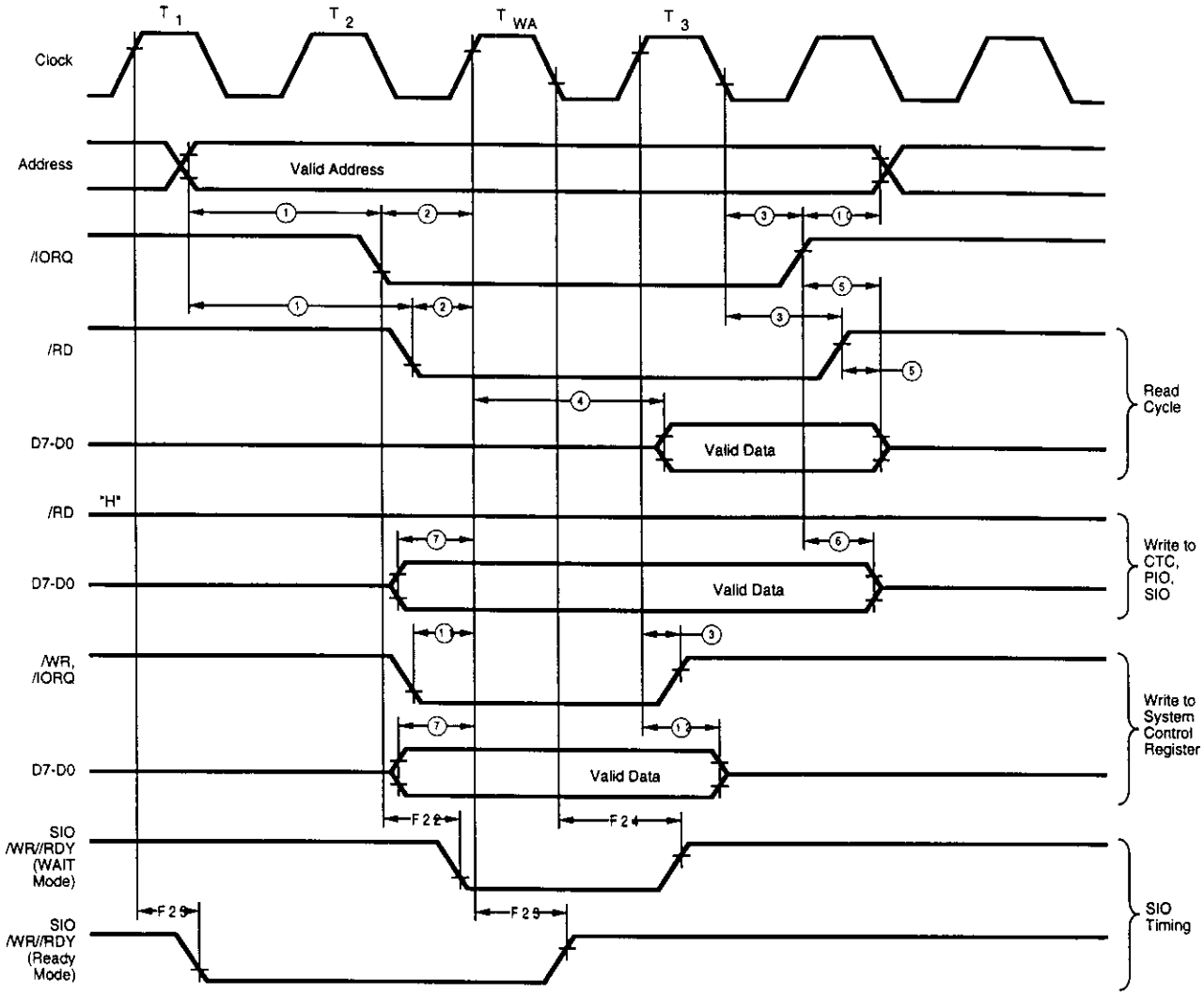

On-chip Peripheral I/O Access from External Bus master

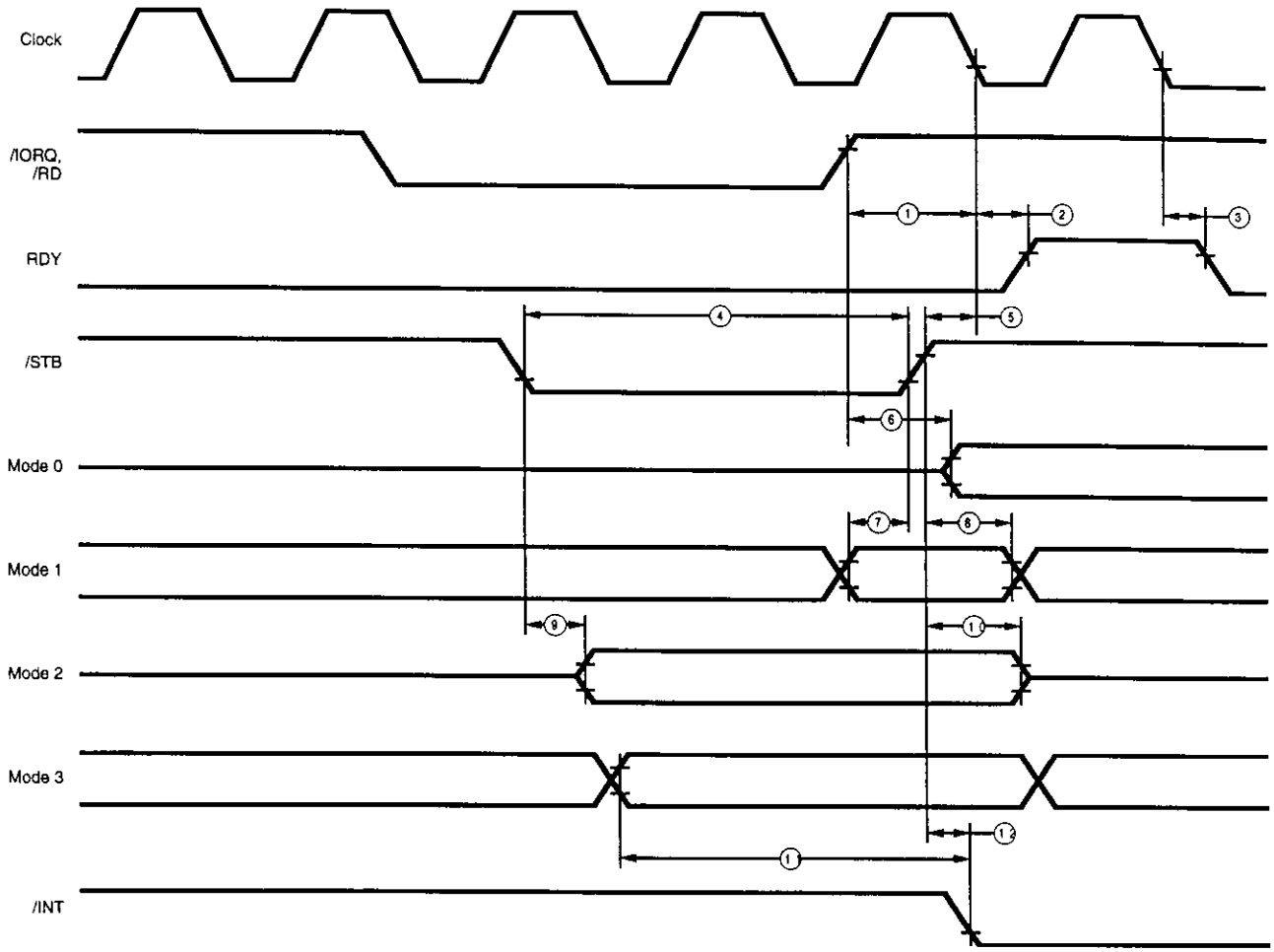

PIO Timing
(See Table D)

TIMING DIAGRAMS (Continued)

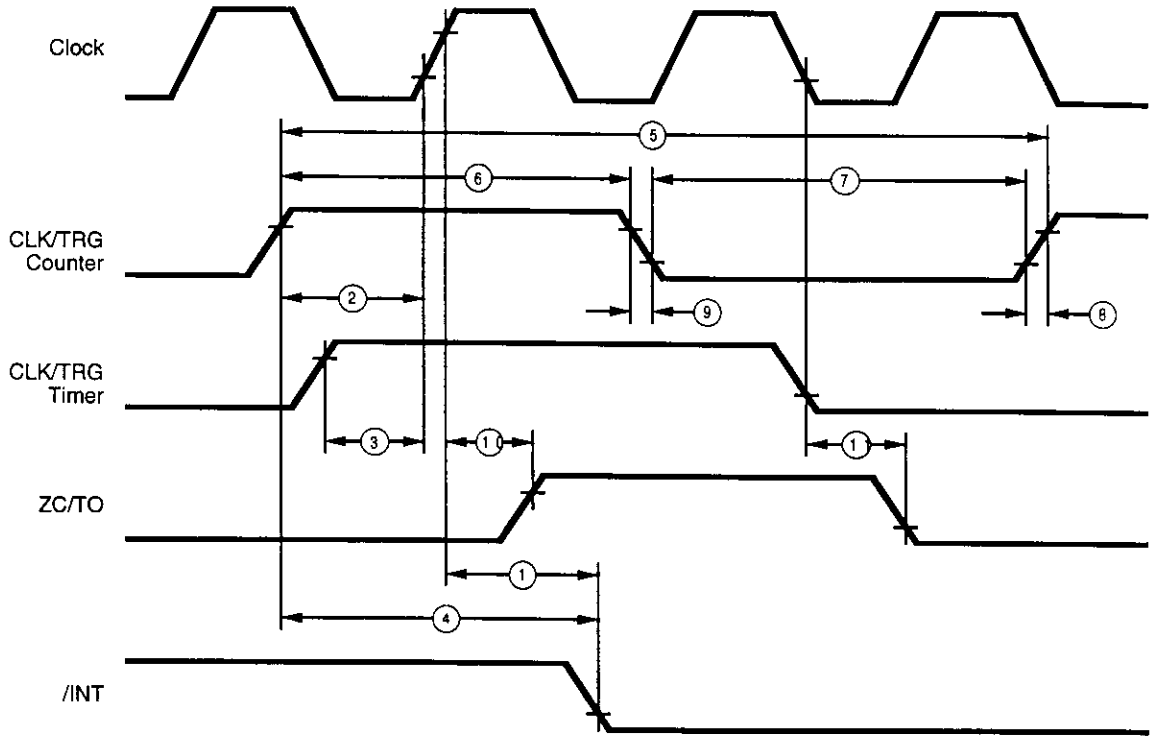

Counter/Timer Timing
(See Table E)

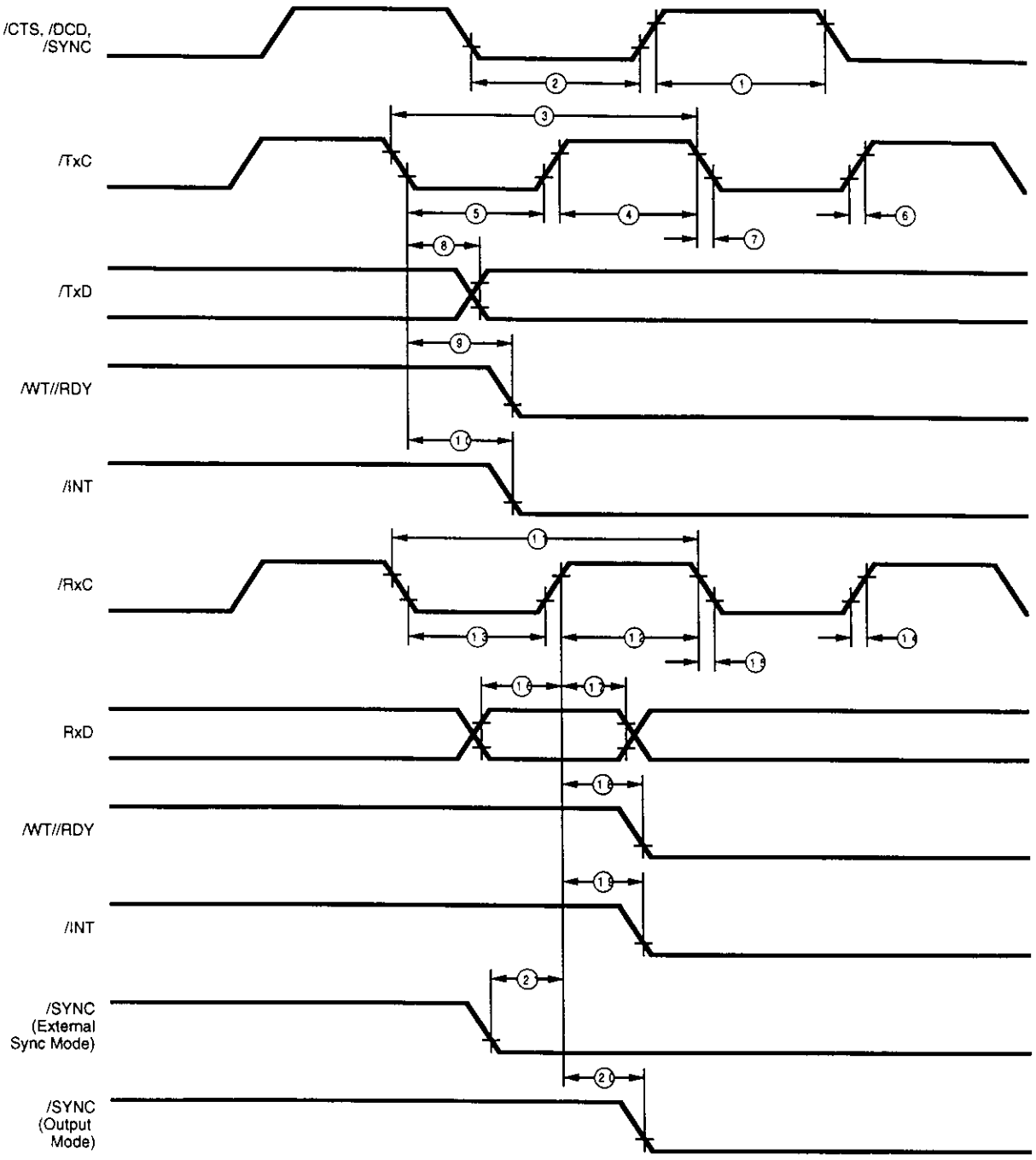

SIO Timing
(See Table F)

TIMING DIAGRAMS (Continued)

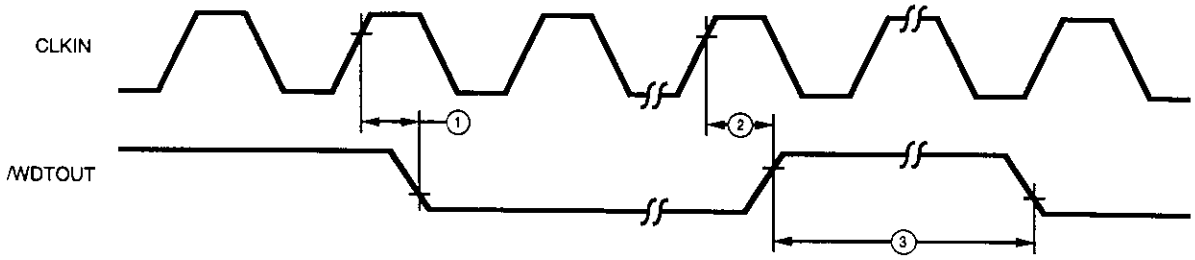

Watch-Dog Timer Timing
(See Table H)

AC CHARACTERISTICS

Table A. CPU Timing

No	Symbol	Parameter	Z84C1306 Z84C1506 Min	Max	Z84C1310 Z84C1510 Min	Max	Z84C1316 † Z84C1516 Min	Max	Unit	Note
1	TcC	Clock Cycle time	162**	DC	100**	DC	61	DC	nS	[A1]
2	TwCh	Clock Pulse Width (High)	65	DC	40	DC	20	DC	nS	[A1]
3	TwCl	Clock Pulse Width (Low)	65	DC	40	DC	20	DC	ns	[A1]
4	TfC	Clock Fall time		20		10		6	ns	[A1]
5	TrC	Clock Rise time		20		10		6	ns	[A1]
6	TdCr(A)	Address Valid from Clock Rise		90		65		55	ns	
7	TdA(MREQf)	Address Valid to /MREQ Fall	35**		0**		–15		ns	
8	TdCf(MREQf)	Clock Fall to /MREQ Fall Delay		70		55		40	ns	
9	TdCr(MREQr)	Clock Rise to /MREQ Rise Delay		70		55		40	ns	
10	TwMREQh	/MREQ Pulse Width (High)	65**		30**		10		ns	[A2]
11	TwMREQl	/MREQ Pulse Width (Low)	132**		75**		25		ns	[A2]
12	TdCf(MERQr)	Clock Fall to /MREQ Rise Delay		70		55		40	ns	
13	TdCf(RDf)	Clock Fall to /RD Fall Delay		80		65		40	ns	
14	TdCr(RDr)	Clock Rise to /RD Rise Delay		70		55		40	ns	
15	TsD(Cr)	Data Setup Time to Clock Rise	30		25		10		ns	
16	ThD(RDr)	Data Hold Time After /RD Rise	0		0		0		ns	
17	TsWAIT(Cf)	/WAIT Setup Time to Clock Fall	60		20		12		ns	
18	ThWAIT(Cf)	/WAIT Hold Time After Clock Fall	10		10		10		ns	
19	TdCr(M1f)	Clock Rise to /M1 Fall Delay		80		65		40	ns	
20	TdCr(M1r)	Clock Rise to /M1 Rise Delay		80		65		40	ns	
21	TdCr(RFSHf)	Clock Rise to /RFSH Fall Delay		110		80		60	ns	
22	TdCr(RFSHr)	Clock Rise to /RFSH Rise Delay		100		80		60	ns	
23	TdCf(RDr)	Clock Fall to /RD Rise Delay		70		55		40	ns	
24	TdCr(RDf)	Clock Rise to /RD Fall Delay		70		55		40	ns	
25	TsD(Cf)	Data Setup to Clock Fall During M2, M3, M4 or M5 Cycles	40		25		12		ns	
26	TdA(IORQf)	Address Stable Prior to /IORQ Fall	107**		50**		0		ns	
27	TdCr(IORQf)	Clock Rise to /IORQ Fall Delay		65		50		40	ns	
28	TdCf(IORQr)	Clock Fall to /IORQ Rise Delay		70		55		40	ns	
29	TdD(WRf)	Data Stable Prior to /WR Fall	22**		40**		–10		ns	
30	TdCf(WRf)	Clock Fall to /WR Fall Delay		70		55		40	ns	
31	TwWR	/WR Pulse Width	132**		75**		25		ns	
32	TdCf(WRr)	Clock Fall to /WR Rise Delay		70		55		40	ns	
33	TdD(WRf)IO	Data Stable Prior to /WR Fall	–55**		–10**		–30		ns	
34	TdCr(WRf)	Clock Rise to /WR Fall Delay		60		50		40	ns	
35	TdWRr(D)	Data Stable from /WR Fall	30**		10**		0	0	ns	
36	TdCf(HALT)	Clock Fall to /HALT 0 or 1		260		90		70	ns	
37	TwNMI	/MNI pulse Width	60		60		60		ns	
38	TsBUSREQ(Cr)	/BUSREQ Setup Time to Clock Rise	50		30		15		ns	
39	ThBUSREQ(Cr)	/BUSREQ Hold Time after Clock Rise	10		10		10		ns	
40	TdCr(BUSACKf)	Clock Rise to /BASACK Fall Delay		90		75		40	ns	

AC CHARACTERISTICS (Continued)

Table A. CPU Timing (Continued)

No	Symbol	Parameter	Z84C1306 Z84C1506 Min	Z84C1306 Z84C1506 Max	Z84C1310 Z84C1510 Min	Z84C1310 Z84C1510 Max	Z84C1316 † Z84C1516 Min	Z84C1316 † Z84C1516 Max	Unit	Note
41	TdCf(BUSACKr)	Clock Fall to /BASACK Rise Delay		90		75		40	ns	
42	TdCr(Dz)	Clock Rise to Data Float Delay		80		65		40	ns	
43	TdCr(CTz)	Clock Rise to Control Outputs Float Delay (/MREQ, /IORQ, /RD and /WR)		70		65		40	ns	
44	TdCr(Az)	Clock Rise to Address Float Delay		80		75		40	ns	
45	TdCTr(A)	Address Hold Time from /MREQ, /IORQ, /RD or /WR	35**		20**			0	ns	
46	TsRESET(Cr)	/RESET to Clock Rise Setup Time	60		40		15		ns	
47	ThRESET(Cr)	/RESET to Clock Rise Hold Time	10		10		10		ns	
48	TsINTf(Cr)	/INT Fall to Clock Rise Setup Time	70		50		15		ns	
49	ThINTr(Cr)	/INT Rise to Clock Rise Hold Time	10		10		10		ns	
50	TdM1f(IORQf)	/M1 Fall to /IORQ Fall Delay	359**		220**		100		ns	
51	TdCf(IORQf)	Clock Fall to /IORQ Fall Delay		70		55		45	ns	
52	TdCf(IORQr)	Clock Rise to /IORQ Rise Delay		70		55		45	ns	
53	TdCf(D)	Clock Fall to Data Valid Delay		130		110		75	ns	
54	TRDf(D)	/RD Fall to Output Data Valid		TBD		60		40	ns	
55	TdIORQ(D)	/IORQ Fall to Output Data Valid		TBD		70		45	ns	
56	TwRESET	/RESET Pulse Width 013/015, or C13/C15 with RESET Output Disabled	3TcC		3TcC		3TcC		ns	
57	TwRESEToe	/RESET Pulse Width RESET Output Enabled	2TcC		2TcC		2TcC		ns	
58	TwRESETdo	/RESET Drive Duration RESET Output Enabled	16TcC		16TcC		16TcC		ns	
59	TwRESETpor	/RESET drive duration on Power-On Sequence	10	75	10	75	10	75	ms	
60	TdCs(A)	Address Valid to Chip Select Valid		25		20		15	ns	

Notes:

† 16 MHz parts are only available in Standard Temperature range.

** For clock period other than the minimum shown, calculate parameters using the formula on Table H.

[A1] These parameters apply to the external Clock input on CLKIN pin. For the cases where external Clock is fed from XTAL1, please refer to Table B.

[A2] For loading >= 50 pF, decrease width by 10 ns for each additional 50 pF.

Table H. Footnote to Table A.

No	Symbol	Parameter	Z84C1306 Z84C1506	Z84C1310 Z84C1510	Z84C1316 Z84C1516
1	TcC	TwCh + TwCl + TrC + TfC			
7	TdA(MREQf)	TwCh + TfC	–50	–50	–45
10	TwMREQh	TwCh + TfC	–20	–20	–20
11	TwMREQl	TcC	–0	–25	–25
26	TdA(IORQf)	TcC	–55	–50	–50
29	TdD(WRf)	TcC	–140	–60	–60
31	TwWR	TcC	-30	–25	–25
33	TdD(WRf)	TwCl + TrC	–140	–60	–60
35	TdWRr(D)	TwCl + TrC	–55	–40	–25
45	TdCTr(A)	TwCl + TrC	–50	–30	–30
50	TdM1f(IORQf)	2TcC + TwCh + TfC	–50	–30	–30

AC CHARACTERISTICS (Continued)

Table B. CGC Timing

No	Symbol	Parameter	Z84C1306 Z84C1506 Min	Z84C1306 Z84C1506 Max	Z84C1310 Z84C1510 Min	Z84C1310 Z84C1510 Max	Z84C1316 † Z84C1516 Min	Z84C1316 † Z84C1516 Max	Unit	Note
1	TRST(INT)S	Clock Restart Time by /INT (STOP Mode)	(Typ)2^{14}+2.5TcC		(Typ)2^{14}+2.5TcC		(Typ)2^{14}+2.5TcC		ns	
2	TRST(MNI)S	Clock Restart Time by /NMI (STOP Mode)	(Typ)2^{14}+2.5TcC		(Typ)2^{14}+2.5TcC		(Typ)2^{14}+2.5TcC		ns	
3	TRST(INT)I	Clock Restart Time by /INT (IDLE Mode)	2.5TcT		2.5TcT		2.5TcT		ns	
4	TRST(Nmi)I	Clock Restart Time by /NMI (IDLE Mode)	2.5TcT		2.5TcT		2.5TcT		ns	
5	TRST(RESET)I	Clock Restart Time by /RESET (IDLE Mode)	1TcC		1TcC		1TcC		ns	
6	TfCLKOUT	CLKOUT Rise Time		15		10		6	ns	
7	TrCLKOUT	CLKOUT Fall time		15		10		6	ns	
8	TcX1	XTAL1 Cycle Time (for External Clock Input on XTAL1)								
		Divide-by-Two Mode	81		50			31	ns	
		Divide-by-One Mode	162		100			61	ns	
9	TwlX1	XTAL1 Low Pulse Width (for External Clock Input on XTAL1)								
		Divide-by-Two Mode	35		15			10	ns	
		Divide-by-One Mode	65		40			25	ns	
10	TwhX1	XTAL1 High Pulse Width (for External Clock input on XTAL1)								
		Divide-by-Two mode	35		15			10	ns	
		Divide-by-One mode	65		40			25	ns	
11	TrX1	XTAL1 Rise Time (for External Clock Input on XTAL1)		25		25		15	ns	[B1]
12	TfX1	XTAL1 Fall Time (for External Clock Input on XTAL1)		25		25		15	ns	[B1]

Note:
[B1] If parameters 8 and 9 are not met, adjust parameters 11 and 12 to satisfy parameters 8 and 9.
† 16 MHz parts are only available in Standard Temperature range.

Table C. Timing for on-chip peripheral access from external bus master and daisy-chain timing

No	Symbol	Parameter	Z84C1306 Z84C1506 Min	Max	Z84C1310 Z84C1510 Min	Max	Z84C1316 † Z84C1516 Min	Max	Unit	Note
1	TsA(Rlf)	Address Setup Time to /RD, /IORQ Fall	50		40		30		ns	
2	TsRl(Cr)	/RD, /IORQ Rise to Clock Rise Setup	60		50		40		ns	
3	Th	Hold time for Specified Setup	15		15		10		ns	
4	TdCr(DO)	Clock Rise to Data out delay		100		80	60		ns	
5	TdRlr(DOz)	/RD, /IORQ Rise to Data Out Float Delay		75		60	50		ns	
6	ThRDr(D)	/M1, /RD, /IORQ Rise to Data Hold	15	40	15	30		20	ns	[C1]
7	TsD(Cr)	Data In to Clock Rise Setup Time	30		25		15		ns	
8	TdIOf(DOI)	/IORQ Fall to Data Out Delay (INTACK cycle)		95		95	70		ns	
9	ThIOr(D)	/IORQ Rise to Data Hold	15		15		10		ns	
10	ThIOr(A)	/IORQ Rise to Address Hold	15		15		10		ns	
11	TsWlf(Cr)	/IORQ, /WR setup time to Clock Rise New parameter	20		20		15		ns	[C2]
12	ThWRr(Cr)	Clock Rise to /IORQ, /WR Rise hold time	0		0		0		ns	[C2]
13	TsM1f(Cr)	/M1 Fall to Clock Rise Setup Time	40		40		15		ns	
14	TsM1r(Cf)	/M1 Rise to Clock Rise Setup Time (/M1 cycle)	–15		–15		–10		ns	
15	TdM1f(IEOf)	/M1 Fall to IEO Fall delay (Interrupt Immediately Preceding /M1 Fall)		140		80		60	ns	
20	TdCf(IEOr)	Clock Fall to IEO Rise Delay	50		40			30	ns	
21	TdCf(IEOf)	Clock Fall to IEO Rise Delay		90		75		75	ns	

Notes:
[C1] For I/O write to PIO, CTC and SIO.
[C2] For I/O Write to system control registers.
[C3] For daisy-chain timing, please refer to the note on Page 24.
† 16 MHz parts are only available in Standard Temperature range.

AC CHARACTERISTICS (Continued)

Table D. PIO Timing (Z84x15 only)

No	Symbol	Parameter	Z84C1506 Min	Z84C1506 Max	Z84C1510 Min	Z84C1510 Max	Z84C1516 † Min	Z84C1516 † Max	Unit	Note
1	TsIOr(Cr)	/IORQ Rise to Clock Fall Setup Time (To Activate RDY on Next Clock Cycle)	100		100		100		ns	
2	TdCf(RDYr)	Clock Fall to RDY Rise Delay		100		115		40	ns	[D2]
3	TdCf(RDYf)	Clock Fall to RDY Fall Delay		100		115		45	ns	[D2]
4	TwSTB	/STB Pulse Width	100		80		50		ns	[D1]
5	TsSTBr(Cr)	/STB Rise to Clock Fall Setup Time (To Activate RDY on Next Clock Cycle)	100		100		70		ns	[D2]
6	TdIOr(PD)	/IORQ Rise to Port Data Stable Delay (Mode 0)		140		120		100	ns	[D2]
7	TsPD(STBr)	Port Data to /STB Rise Setup Time (Mode 1)	140		75		30		ns	
8	ThPD(STBr)	Port Data to /STB Rise Hold Time (Mode 1)	15		15		15		ns	
9	TdSTBf(PD)	/STB Fall to Port Data Stable (Mode 2)		150		120		35	ns	[D2]
10	TdSTBr(PDz)	/STB Rise to Port Data Float Delay (Mode 2)		140		120		55	ns	
11	TdPD(INTf)	Port Data Match to /INT Fall Delay (Mode 3)		250		200		40	ns	
12	TdSTBr(INTf)	/STB Rise to /INT Fall Delay		290		220		90	ns	

Notes:
[D1] For Mode 2: TwSTB >TsPD(STB).
[D2] Increase these values by 2 ns for 10 pF increase in loading up to 100 pF Max.
† 16 MHz parts are only available in Standard Temperature range.

Table E. CTC Timing

No	Symbol	Parameter	Z84C1306 Z84C1506 Min	Z84C1306 Z84C1506 Max	Z84C1310 Z84C1510 Min	Z84C1310 Z84C1510 Max	Z84C1316 † Z84C1516 Min	Z84C1316 † Z84C1516 Max	Unit	Note
1	TdCr(INTf)	Clock Rise to /INT Fall Delay		(TcC+100)		(TcC+80)		(TcC+30)		[E1]
2	TsCTR(Cc)	CLK/TRG to Clock Rise Setup Time for Immediate Count	90		90		40		ns	[E2]
3	TsCTR(Ct)	CLK/TRG to Clock Rise Setup Time for Enabling of Prescaior on Following Clock Rise	90		90		40		ns	[E1]
4	TdCTR(INTf)	CLK/TRG to /INT Fall Delay								
		TsCTR(C) Satisfied		(1)+(3)		(1)+(3)		(1)+(3)	ns	[E2]
		TsCTR(C) not Satisfied		TcC+(1)+(3)		TcC+(1)+(3)		TcC+(1)+(3)	ns	[E2]
5	TcCTR	CLK/TRG Cycle time	(2TcC)	DC	(2TcC)	DC	(2TcC)	DC	ns	[E3]
6	TwCTRh	CLK/TRG Width (Low)	90	DC	90	DC	25	DC	ns	
7	TwCTRl	CLK/TRG Width (High)	90	DC	90	DC	25	DC	ns	
8	TrCTR	CLK/TRG Rise Time		30		30		15	ns	
9	TfCTR	CLK/TRG Fall Time		30		30		15	ns	
10	TdCr(ZCr)	Clock Rise to ZC/TO Rise Delay		80		80		25	ns	
11	TdCf(ZCf)	Clock Fall to ZC/TO Fall Delay		80		80		25	ns	

Notes:
[E1] Timer Mode.
[E2] Counter Mode.
[E3] Counter Mode only; when using a cycle time less than 3TcC, parameter #2 must be met.
† 16 MHz parts are only available in Standard Temperature range.

Table F. SIO Timing

No	Symbol	Parameter	Z84C1306 Z84C1506 Min	Max	Z84C1310 Z84C1510 Min	Max	Z84C1316 † Z84C1516 Min	Max	Unit	Note
1	TwPh	Pulse Width (High)	150		120		80		ns	
2	TwPl	Pulse Width (Low)	150		120		80		ns	
3	TcTxC	/TxC Cycle Time	250		200		120		ns	[F1]
4	TwTxCh	/TxC Width (High)	85		80		55		ns	
5	TwTxCl	/TxC Width (Low)	85		80		80		ns	
6	TrTxC	/TxC Rise Time		60		60		60	ns	
7	TfTxC	/TxC Fall Time		60		60		60	ns	
8	TdTxCf(TxD)	/TxC Fall to TxD Delay		160		120		95	ns	
9	TdTxCf(W/RRf) (Ready Mode)	/TxC Fall to /W//RDY Fall Delay	5	9	5	9	5	8	TcC	
10	TdTxCf(INTf)	/TxC Fall to /INT Fall Delay	5	9	5	9	5	9	TcC	
11	TcRxC	/RxC Cycle Time	250		200		120		ns	[F1]
12	TwRxCh	/RxC Width (High)	85		80		55		ns	
13	TwRxCl	/RxC Width (Low)	85		80		70		ns	
14	TrRxC	/RxC Rise Time		60		60		60	ns	
15	TfRxC	/RxC Fall Time		60		60		60	ns	
16	TsRxD(RxCr)	RxD to /RxC Rise Setup Time (X1 Mode)	0		0		5		ns	
17	ThRxCr(RxD)	/RxC Rise to RxD Hold Time (X1 Mode)	80		60			40	ns	
18	TdRxCr(W/RRf)	/RxC Rise to /W//RDY Fall Delay (Ready Mode)	10	13	10	13	10	13	TcC	
19	TdRxCr(INTf)	/RxC Rise to /INT Fall Delay	10	13	10	13	10	13	TcC	
20	TdRxCr(SYNCf)	/RxC Rise to /SYNC Fall Delay (Output Modes)	4	7	4	7	4	7	TcC	
21	TsSYNCf(RxCr)	/SYNC Fall to /RxC Rise Setup (External Sync Modes)	–100		–100		–100		ns	[F2]
22	TdIOf(W/RRf)	/IORQ Fall or Valid Address to /W//RDY Delay (Wait Mode)		130		110		40	ns	[F2]
23	TdCr(W/RRf)	Clock Rise to /W//RDY Delay (Ready Mode)		85		85		40	ns	[F2]
24	TdCf(W/Rz)	Clock Fall to /W//RDY Float Delay (Wait Mode)		90		80		40	ns	[F2]

Notes:

[F1] In all modes, the System Clock rate must be at least five times the maximum data rate.

[F2] Parameters 22 to 24 are on page 14.

† 16 MHz parts are only available in Standard Temperature range.

AC CHARACTERISTICS (Continued)

Table G. Watch-Dog Timer Timing

No	Symbol	Parameter	Z84C1306 Z84C1506 Min	Max	Z84C1310 Z84C1510 Min	Max	Z84C1316 † Z84C1516 Min	Max	Units
1	TdC(WDTf)	Clock Rise to /WDTOUT Fall Delay		160		160		160	ns
2	TdCr(WbTc)	Clock Rise to /WDTOUT Rise Delay		165		165		160	ns
3	TcWDT	/WDTOUT Cycle Time							
		WDTP = 00	(Typ)2^{16}TcC		(Typ)2^{16}TcC		(Typ)2^{16}TcC		ns
		WDTP = 01	(Typ)2^{18}TcC		(Typ)2^{18}TcC		(Typ)2^{18}TcC		ns
		WDTP = 10	(Typ)2^{20}TcC		(Typ)2^{20}TcC		(Typ)2^{20}TcC		ns
		WDTP = 11	(Typ)2^{22}TcC		(Typ)2^{22}TcC		(Typ)2^{22}TcC		ns

Notes:
* In all modes, the System Clock rate must be at least five times the maximum data rate.
RESET must be active a minimum of one complete clock cycle.
[1] Units equal to System Clock Periods.
[2] Units in nanoseconds (ns).
† 16 MHz parts are only available in Standard Temperature range.

Additional information for note [C3]

Parameter #15, 16, 17 and 18 of Table C. These parameters are daisy-chain timing and calculated values, and vary depending on the inside daisy-chain configuration, which is specified in the Interrupt Priority Register. Inside the IPC, the daisy-chain can be figured as follows:

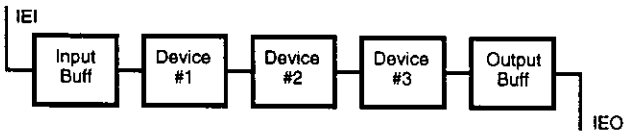

Internal Daisy-Chain Configuration

No	Parameter	6 MHz Min	Max	10 MHz Min	Max	16 MHz* Min	Max	Units
15	TdM1(IEO)		160		100		80	ns
16	TsIEI(IO) (PIO at #3)	230		140		100		ns
	(CTC at #3)	280		160		120		ns
	(SIO at #3)	290		160		120		ns
17	TdIEI(IEOf)		120		70		70	ns
18	TdIEI(IEOr)		290		150		120	ns

To calculate IPC daisy-chain timing, it can be treated as if there are Z80 PIO, CTC and SIO with Input buffer and look ahead circuit on the chain. Following are the calculation formulas:

Parameter Table C, #15, /M1 falling to IEO delay
TsM1(IEO) = Max[TdM1(IO)#1, TdM1(IO)#2, TdM1(IO)#3] + (look-ahead gate Delay)

Parameter Table C, #16, IEI to /IORQ falling setup time
TsIEI(IO) = TdIEI(IEO)#1 + TdIEI(IEO)#2 + TsIEI(IO)#3 + (Input Buffer delay)

Parameter Table C, #17, IEI falling to IEO falling delay
TdIEI(IEOf) = Max[TdIEI(IEOf)PIO, TdIEI(IEOf)CTC, TdIEI(IEOf)SIO] + (Input Buffer delay) + (look-ahead gate Delay)

Parameter Table C, #18, IEI rising to IEO rising delay (After ED decode) TdIEI(IEOr) = TdIEI(IEOr)PIO + TdIEI(IEOr)CTC + TdIEI(IEOr)SIO + (Input Buffer delay) + (look-ahead gate Delay)

* Where TdIEI(IEO) is worse number between TdIEI(IEOr) and TdIEI(IEOf)

ERRATA

1. One of the operational modes is STOP mode. All operation of the internal oscillator, clock (CLK) output, internal clock to the CPU, PIO, SIO, and the watch-dog timer are stopped at 0 level of the T4 state in the HALT instruction operation code fetch cycle. In STOP mode of operation, the chip will not restart by inputting /RESET.

   Workaround:
   Use either /NMI or any other /INT, or power-down and power-up to restart again.

2. RFSH by definition should go into High Z state when the EV pin is active. This is not happening and RFSH is not going into High Z state. This could cause a problem with the emulator boards. A device emulator is driving RFSH at the same time the Z84C15 is driving a 1 level. This will cause an extra 30 mA+ current in the RFSH buffer.

   Workaround:
   If the customer does not use the RFSH pin, then the emulator will still work but will measure an extra 30 mA ICC current. If the customer application uses the RFSH pin, then a 3 level signal could cause the emulator board fail. This can be fixed by adding a jumper to the board on the RFSH pin, when using an emulator open the RFSH pin to the Z84C15. When not using an emulator jumper, RFSH to the output from the emulator board.

3. PIO Port A has inconsistent output drive. Bits 0, 1, 2, 6, and 7 have standard drive current, while bits 3, 4, and 5 have STD + 50%.

   Workaround:
   This should not cause any problems.

4. The Z84C15 will sometimes lock up in power cycling. This is because the Power-on Reset implementation requires complete discharge to logic 0 to trigger.

   Workaround:
   Make sure the device is powered-down completely before it is powered-up again.

© 1993 by Zilog, Inc. All rights reserved. No part of this document may be copied or reproduced in any form or by any means without the prior written consent of Zilog, Inc. The information in this document is subject to change without notice. Devices sold by Zilog, Inc. are covered by warranty and patent indemnification provisions appearing in Zilog, Inc. Terms and Conditions of Sale only. Zilog, Inc. makes no warranty, express, statutory, implied or by description, regarding the information set forth herein or regarding the freedom of the described devices from intellectual property infringement. Zilog, Inc. makes no warranty of merchantability or fitness for any purpose. Zilog, Inc. shall not be responsible for any errors that may appear in this document. Zilog, Inc. makes no commitment to update or keep current the information contained in this document.

Zilog's products are not authorized for use as critical components in life support devices or systems unless a specific written agreement pertaining to such intended use is executed between the customer and Zilog prior to use. Life support devices or systems are those which are intended for surgical implantation into the body, or which sustains life whose failure to perform, when properly used in accordance with instructions for use provided in the labeling, can be reasonably expected to result in significant injury to the user.

Zilog, Inc. 210 East Hacienda Ave.
Campbell, CA 95008-6600
Telephone (408) 370-8000
Telex 910-338-7621
FAX 408 370-8056